PUBLIC SAFETY COMMITTEE MEETING
CITY HALL CONFERENCE ROOM
300 W. CROWELL STREET
MONROE, NORTH CAROLINA 28112
AUGUST 3, 2026 – 4:15 PM
AGENDA
www.monroenc.org

1. Minutes of Public Safety Committee Meeting of July 6, 2026

2. Budget Amendment for Fire Department Payment from Union County Water Rescue and Hazardous Material Response Assistance Interlocal Agreement

3. Fire Department Apparatus Replacement Plan

4. Transfer of Ownership of Retiring Police K-9 Tank (Surplus Equipment) to Police Officer Brian Hunter

5. Police Department Reclassification from Parking Enforcement to Community Liaison

6. Budget Ordinance for Safe Streets and Roads for All Safety Action Plan

7. NC 200 (MLK/Dickerson) and Charlotte Avenue Improvements

8. Resolution Requesting Speed Limit Reduction for Stafford Street Extension

9. North Carolina Department of Transportation Betterment Agreement for Aesthetic Wall Enhancements for Concord Avenue Bridge Replacement Project

10. Budget Ordinance and NCDOT Municipal Agreement for the Circle Drive Shared-Use Path Project

11. Proposed Right-of-Way Abandonment of Four-Foot Wide Walkway Between Elizabeth Avenue and Normand Street

12. Flashing Stop Sign Frames at Intersection of Virginia Avenue and S. Westover Drive

13. Speed Cushions on Arnold Drive

14. Review Curfew Ordinance

15. Engineering Department Award of Purchase Contract for Dump Truck

PUBLIC SAFETY COMMITTEE
MEETING MINUTES
July 6, 2026

The Public Safety Committee met on June 1, 2026, at 4:15 p.m. in the City Hall Large Conference Room.

Members Present:	Chairman David Dotson, Council Member Julie Thompson
Absent:	Council Member Gary Anderson
Staff Present:	City Manager Mark Watson, Assistant City Manager Lisa Hollowell, Assistant City Manager Jeff Wells, Fire Chief Ron Fowler, Fire Deputy Chief Travis Stegall, Fire Administrative Assistant II Alice Withers, Police Chief Rhett Bolen, Police Assistant Chief T. J. Goforth, Police Major Shannon Huntley, Police Lieutenant Kris Westover, Police Captain Chad Shoultes, Police Sergeant David Simpson, Police Captain Monique Holt, Police Lieutenant Morgan Malone, Finance Director Lisa Strickland, City Attorney Richard Long, Senior Staff Attorney Terry Sholar, Grant Administrator Lisa Kerner, Engineering Director Sarah McAllister, Land Development Engineering Manager Will Auret
Guests:	Abigail Pepper, Melinda Plue

Chairman David Dotson called the meeting to order at 4:16 p.m.

Item 1: Minutes from June 1, 2026 Meeting
Chairman Dotson made a motion to approve the minutes of the Public Safety Committee meeting of June 1, 2026. Council Member Thompson seconded the motion and the motion passed unanimously.

Item 2: Donation to Fire Explorers
Fire Chief Ron Fowler presented to the Committee a donation in the amount of $250 to the Fire Explorers from Council Member Thompson's discretionary account. Chairman Dotson made a motion to forward to Council for approval. Council Member Thompson seconded the motion and the motion passed unanimously.

Item 3: Downtown Speed Recommendations:
Police Sergeant David Simpson presented to the Committee a request from City Council for recommendations on addressing the speed complaints and "Strict Enforcement of Speed Limits in Downtown". Several ideas were presented and this item was intended for discussion and information purposes only, however it was suggested to start with a radar sign on Jefferson Street, delineators on E. Franklin Street, and adjust the speed limit sign on Crowell Street from

25 mph to 20 mph.

Chairman Dotson made a motion to forward these items to Council for approval and revisit other areas at the next meeting. Council Member Thompson seconded the motion and the motion passed unanimously.

Item 4: "Confirm Ok"
Police Lieutenant Morgan Malone presented to the Committee a wellness check program designed to help vulnerable individuals who live alone remain connected and safe while maintaining their independence. This was for informational and discussion purposes only.

Item 5: Police Foundation
Police Chief Rhett Bolen presented to the Committee a non-profit, community-led organization that works alongside our police department to fund and support initiatives that go beyond the City's budget. Initiatives that strengthen relationships, improve safety and enhance programs. This was for informational and discussion purposes only.

Item 6: Street Naming for a portion of James Hamilton Road
Engineering Director Sarah McAllister presented to the Committee a resolution for a new name for the realigned portion of James Hamilton Road that serves Dollar General and RaceTrac. Cal Turner Way is proposed in honor of their founder. Council Member Thompson made a motion to forward to Council for approval. Chairman Dotson seconded the motion and the motion passed unanimously.

Item 7: Voluntary Disability Awareness Vehicle Identification Program
City Manager Watson presented a program that provides residents with disabilities, for example: nonverbal, autism, PTSD, hearing impaired, etc. a sticker for their vehicle that would discretely identify their condition/disability and alert first responders and could impact communication or behavior during a stressful encounter. This was for informational and discussion purposes only.

Adjournment
There being no further business, Chairman Dotson made a motion to adjourn the meeting. Council Member Thompson seconded the motion, which passed unanimously, and the meeting was adjourned at 5:11 p.m.

Respectfully submitted,

Alice Withers – Committee Secretary

City of Monroe
Where Heartland Meets High Tech

STAFF REPORT

TO: Public Safety Committee

VIA: Mark Watson, City Manager

DATE: August 3, 2026

FROM: Ronald D. Fowler, Fire Chief

PREPARED BY: Alice Withers, Administrative Assistant II - Fire

SUBJECT: Budget Amendment for Interlocal Agreement Funds

SUMMARY STATEMENT

The Fire Department seeks to accept funds from Union County per an interlocal agreement in the amount of $75,000.

REVIEW

As per an Interlocal Agreement with Union County, the City has received $75,000 to be allocated to the Fire Department as follows; $37,500 for Swift Water Rescue mutual aid assistance, $37,500 for Hazardous Material Response mutual aid assistance.

RECOMMENDATION

Staff requests the Public Safety Committee to recommend that Council accept the $75,000 Interlocal Agreement funds and approve Budget Amendment BA-2026-11 and to appropriate and designate these funds to Fire expenditure accounts.

Attachment: BA-2026-11

CITY OF MONROE
BUDGET AMENDMENT
BA-2026-11

1. Amendment necessary to designate and appropriate funds received from Union County.

General Fund:

Revenues:

Interlocal Agreement-Union County	$75,000

Expenditures

Fire Department	$75,000
TOTAL:	**$75,000**

Adopted this the 11th day of August, 2026.

_____
Robert A. Burns, Mayor

Attest:

_____
Bridgette H. Robinson, City Clerk

STAFF REPORT

TO: Public Safety Committee

VIA: Mark Watson, City Manager

DATE: August 3, 2026

FROM: Ronald D. Fowler, Fire Chief

PREPARED BY: Alice Withers, Administrative Assistant II

SUBJECT: Fire Apparatus Replacement Plan

SUMMARY STATEMENT

Discussion of an apparatus replacement plan for the fire department fleet.

REVIEW

Staff will discuss an apparatus replacement plan, which could help identify when an apparatus is due for replacement, as well as project an estimated cost.

RECOMMENDATION

This is for discussion purposes only.

STAFF REPORT

TO: Public Safety Committee

VIA: Mark Watson, City Manager

DATE: August 3, 2026

FROM: Rhett Bolen, Police Chief

PREPARED BY: TJ Goforth, Asst. Chief

SUBJECT: Retiring K-9 Tank

SUMMARY STATEMENT

Award of retiring Police K-9 Tank (surplus equipment) to handler Brian Hunter.

REVIEW

Police K-9 Tank (surplus equipment) will be retiring from the City of Monroe due to his age and a recent health diagnosis. The General Assembly of North Carolina authorizes local government to retire and surplus a Police K-9. K-9 Tank has served the Monroe community honorably since 2020 and is no longer needed for public service. General Statute §17F-21 authorizes the disposition of retired service animals which authorizes local government to transfer ownership to the officer who had normal custody and control of the service animal which would be Officer Brian Hunter.

RECOMMENDATION

Staff recommends that the Public Safety Committee transfer ownership of K-9 Tank (surplus equipment) to Officer Brian Hunter.

STAFF REPORT

TO: Public Safety Committee

VIA: Mark Watson, City Manager

DATE: August 3, 2026

FROM: William Rhett Bolen, Police Chief

PREPARED BY: TJ Goforth, Asst. Chief

SUBJECT: Position Reclassification

SUMMARY STATEMENT

Request to reclassify positions 101059 and 100508.

REVIEW

Positions 101059 and 100508 currently assigned as (PT) Parking Enforcement positions. It is requested to reclassify these positions to a Community Liaison (PT) title.

RECOMMENDATION

Staff requests that the Public Safety Committee approve these reclassifications to allow the Police Department to enhance our Community Division with these 2 (PT) positions.

STAFF REPORT

TO:	Public Safety Committee
VIA:	Mark Watson, City Manager
DATE:	August 3, 2026
FROM:	Lisa Stiwinter, Planning and Development Director
PREPARED BY:	Bryson Hester, Transportation Planner
SUBJECT:	Budget Ordinance- Safe Streets and Roads for All (SS4A) Safety Action Plan

SUMMARY STATEMENT

The Public Safety Committee is requested recommend City Council approve a Budget Ordinance establishing the Safe Streets and Roads for All (SS4A) Safety Action Plan project budget in the amount of $150,000 including $120,000 in federal grant funds and $30,000 in required local match, and authorize the creation of the associated project account(s) for accounting, tracking and reimbursement purposes.

REVIEW

Background:
The City of Monroe was awarded a federal Safe Streets and Roads for All (SS4A) grant to complete a citywide Safety Action Plan. The total project budget is $150,000, consisting of $120,000 in federal funds and a required $30,000 local match.

This plan will help Monroe take a more structured data-driven approach to transportation safety by identifying key issues, reviewing crash and roadway conditions, gathering input, and prioritizing future safety improvements. The plan will be completed by the City's on-call transportation planning services consultant, RK&K.

Purpose:
The purpose of this item is to establish the project budget and account structure so the City can properly manage the grant, track costs, and process our future reimbursements in accordance with federal requirements.

This action does not adopt the Safety Acton Plan itself and does not award a consultant contract. This is the first administrative step needed to move the project forward properly since it will span across multiple years.

Upon approval of the budget ordinance and establishment of the project account, staff anticipates moving forward with the City's on-call transportation planning consultant for professional services associated with development of the Safety Action Plan, consistent with applicable procurement and contract requirements.

This effort is also well timed as Charlotte Regional Transportation Planning Organization (CRTPO), our regionally designated Municipal Planning Organization (MPO), is also undertaking their own regional safety planning effort, allowing Monroe a unique opportunity to develop a local plan that complements the broader regional work while focusing specifically on the City's local needs and priorities.

The completion and adoption of this plan will also place Monroe in a stronger position for future safety implementation and funding opportunities that would not otherwise be available.

RECOMMENDATION

Staff recommends that the Public Safety Committee requests City Council approve the attached Budget Ordinance establishing he Safe Streets and Roads for All (SS4A) Safety Action Plan project budget in the amount of $150,000, including $120,000 in federal grant funds and the required $30,000 local match, so the City can properly establish the project account and move forward with the grant administration process.

Attachment(s):
Capital Project Budget Ordinance SS4A BO-2026-
SS4A Signed Grant Agreement

CITY OF MONROE, NORTH CAROLINA
CAPITAL PROJECT BUDGET ORDINANCE
SAFE STREETS AND ROADS FOR ALL: SAFETY ACTION PLAN
BO-2026-16

WHEREAS, the City of Monroe has been awarded federal funding through the U.S. Department of Transportation/ Federal Highway Administration (FHWA) under Safe Streets and Roads for All (SS4A) program to develop a citywide Safety Action Plan and related eligible planning activities; and

WHEREAS, the City of Monroe has been designated as a recipient to receive funds with the grant providing a Federal Share of $120,000 and requires a Recipient Share of $30,000 for a total project budget of $150,000 (Federal Award No. 693JJ32640034); and

WHEREAS, the period of performance is 24 months from the effective date of the award;

WHEREAS, the project scope is to develop a comprehensive safety study to identify current and future areas of focus to improve safety for all modes of transportation, and to use that study to create a citywide Safety Action Plan; and

WHEREAS, the project will extend across multiple fiscal years and the City desires to establish a dedicated capital project account for accounting, tracking and reporting purposes and to appropriate the grant revenues and expenditures necessary to procure professional services and complete the project in accordance with federal requirements.

NOW, THEREFORE, BE IT ORDAINED that the City Council of the City of Monroe applies these funds toward capital project for the SS4A Safety Action Plan, as follows:

General Capital Projects Fund:

Expenditures – RD1701:	
Transfer to RD2601- SS4A Safety Action Plan (Match)	$30,000
Sidewalk Construction	($30,000)
Revenues - RD2601:	
Restricted Intergovernmental – SS4A (USDOT/FHWA)	$120,000
Transfer from RD1701- SS4A Safety Action Plan (Match)	$30,000
Expenditures – RD2601:	
SS4A Safety Action Plan Project Costs	$150,000

BE IT FURTHER ORDAINED that an amendment to the General Fund Budget for FY 2026-27 is approved to appropriate the SS4A Safety Action Plan project in the total amount of $150,000.

Adopted this 11th day of August, 2026.

Attest:

Robert Burns, Mayor

Bridgette H. Robinson, City Clerk

STAFF REPORT

TO: Public Safety Committee

VIA: Mark Watson, City Manager

DATE: August 3, 2026

FROM: Sarah McAllister, PE, Engineering Director

PREPARED BY: Sarah McAllister, PE – Engineering Director

SUBJECT: NC 200 (MLK/Dickerson) and Charlotte Ave Improvements

---

SUMMARY STATEMENT

The Public Safety Committee is requested to consider a funding inquiry from the North Carolina Department of Transportation (NCDOT) for the NC 200 (MLK Blvd/Dickerson Blvd) and Charlotte Ave improvements project.

REVIEW

NCDOT has been able to secure $2M in spot safety, spot mobility, and resurfacing funds for the Dickerson Blvd/MLK Blvd and Charlotte Ave Improvements project. The concept for the project includes a raised median along Dickerson Blvd with a new signal at Sparta Dr/Braemar Village Dr and widening of MLK from Charlotte Ave to Goldmine Road. Their current estimate for the project is just over $7.1M. They are confident they can secure funding up to a 30% match and hopeful they can get to 35%. NCDOT is looking at applying for DA funds through Charlotte Regional Transportation Planning Organization's (CRTPO) process and have stated that projects have needed a 40% or 50% match to be competitive in the past. CRTPO's call for projects will open in August and close in October. NCDOT has reached out to see if the City would be willing to put anything towards this project. Based on the percentages stated that are needed to be competitive, the need would range from approximately $360k (5%) to $1.07 M (15%). It is anticipated that the funding would not be needed for 2-3 years. The conceptual plan, project estimate, and summary of the current commitments for the Powell Bill Reserves are attached for reference.

RECOMMENDATION

Engineering staff will be prepared to discuss the project.

Attachments:
Conceptual Plan
Project Estimate
Powell Bill Reserves Summary

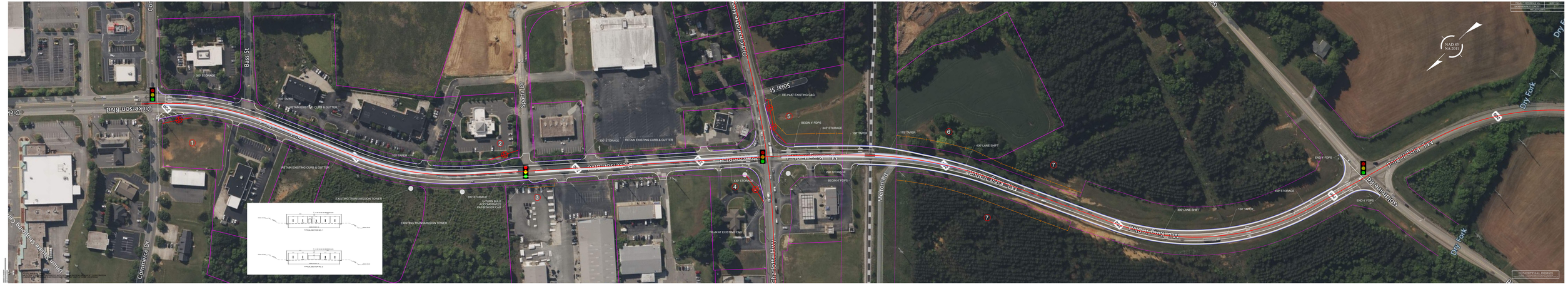
Dickerson Blvd
Commerce Dr
Bass St
Solar St
Old Charlotte Hwy
Charlotte Hwy
Melton Rd
Dry Fork
NAD 83
NA 2011
300' STORAGE
100' TAPER
RETAIN EXISTING CURB & GUTTER
EXISTING TRANSMISSION TOWER
TIE-IN AT EXISTING C&G
BEGIN 4 FDPS
340' STORAGE
170' TAPER
400' LANE SHIFT
200' STORAGE
430' STORAGE
END 4 FDPS
150' TAPER
TYPICAL SECTION NO. 1
TYPICAL SECTION NO. 2
CONCEPTUAL DESIGN
NOT FOR CONSTRUCTION

WBS :		TIP:	
Type of Work:	Grading, Asphalt Paving, Concrete Curb and Gutter, Drainage, Signals, Monolithic Concrete Islands, and Thermoplastic Pavement Marking		
County:	Union		
Location:	NC 200 Dickerson Blvd From Commerce Dr to Goldmine Rd		

LINE NO.	DESC. NO.	MASTER ITEM NO.	SEC. NO.	ITEM DESCRIPTION	EST. QTY.	UNIT	UNIT PRICE	TOTAL AMOUNT
	1			PE	1	LS	$275,000.00	$275,000.00
				INFLATION	1	LS	$13,750.00	$13,750.00
				40% CONTINGENCY	1	LS	$110,000.00	$110,000.00
	1			ROW/UTILITY	1	LS	$205,000.00	$205,000.00
				INFLATION	1	LS	$21,012.50	$21,012.50
				40% CONTIGENCY	1	LS	$82,000.00	$82,000.00
	1			CONSTRUCTION	1	LS	$3,371,000.00	$3,371,000.00
				INFLATION	1	LS	$726,450.50	$726,450.50
				40% CONTINGENCY	1	LS	$1,348,400.00	$1,348,400.00
	1			BSIP ENGINEERING AND INSPECTION	1	LS	$980,253.09	$980,253.09
				ROW/UTILITY BREAKDOWN				
1	424	3389400000-E	865	ROW ACQUISTION	1	LS	$175,000.00	
2	426	3389600000-N	865	UTILITY RELOCATION	1	LS	$30,000.00	
				CONSTRUCTION BREAKDOWN				
1	1	0000100000-N	800	MOBILIZATION	1	LS	$191,000.00	
2	33	0043000000-N	226	GRADING	1	LS	$350,000.00	
3	263	1891500000-N	SP	ASPHALT (INCLUDING MILLING)	1	LS	$695,000.00	
4	322	2474000000-N	SP	DRAINAGE	1	LS	$380,000.00	
5	369	2766000000-N	SP	CONCRETE	1	LS	$190,000.00	
6	614	4457000000-N	SP	TRAFFIC CONTROL	1	LS	$350,000.00	
7	641	4685000000-E	1205	THERMOPLASTIC PAVEMENT MARKINGS	1	LS	$60,000.00	
8	773	5255000000-N	1413	SIGNING	1	LS	$10,000.00	
9	1045	6133000000-N	SP	EROSION	1	LS	$60,000.00	
10	1304	7985000000-N	SP	RAILROAD SIGNAL W/ GATES AND RUBBER CROSSING	1	LS	$850,000.00	
11	1304	7985000000-N	SP	SIGNAL (NEW AND MODIFY EXISTING)	1	LS	$235,000.00	
				DATE: July 9, 2026				
				COMPLETE BY: Chad Burris				
				TOTAL ESTIMATE FOR PROJECT				$7,132,866.09

This estimate was completed with no plans for reference.

NCDOT Projects - Powell Bill Funding Obligations

Project	Amount	R/W Utilities	Construction	Comments
US 74 Widening U-5764 & U-5931	$360,000	FY 25	2030	Participation approved. Betterment costs needed Summer of 2033
US 74/ US 601 Interchange U-5723	$535,137	In progress	2030	Participation approved at previous amount of $252,980; Betterment costs needed Summer of 2031
US 601 Widening U-4024	$411,500	PE only	TBD	Participation approved. Let date is July 2027 per meeting on 8/15/25
Concord Avenue Bridge -BR-0049	$136,988		2027	Previous amount of $127,568; Betterment costs needed Summer of 2029
Charlotte Avenue U-6031	$193,000	FY 28	2030	Participation approved.
Rocky River Road and Weddington Rd Intersection Improvements U-6246	$50,000	2025	2027	Participation approved November 12, 2019
Total =	$1,686,625			

Powell Bill Reserves Balance	$3,831,475
	-$1,686,625
	$2,144,850
FY 28 Resurfacing	$713,000
FY 29 Resurfacing	$713,000
	$1,426,000
Powell Bill Uncommitted Funds	**$718,850**

Charles St Sidewalk - not yet committed.
$214,085.00

CRTPO Projects - Project RD 1701 - Sidewalk Construction Funding Obligations

Project	Amount	R/W Utilities	Construction	Comments
Circle Drive sidewalk from Franklin St to Sunset Dr	$571,096			CRTPO Discretional Funds awarded 2026

RD 1701 Sidewalk Construction	$ 854,780.92
RD 1701 Uncommitted Funds	**$ 283,684.92**

STAFF REPORT

TO: Public Safety Committee

VIA: Mark Watson, City Manager

DATE: August 3, 2026

FROM: Sarah McAllister, P.E., Director of Engineering

PREPARED BY: Sarah McAllister, P.E., Director of Engineering

SUBJECT: Speed Limit Reduction Request for Stafford Street Extension

---

SUMMARY STATEMENT

The Public Safety Committee is requested to consider requesting the North Carolina Department of Transportation (NCDOT) to reduce the speed limit on Stafford St Ext from Sutherland Ave to the northern City Limits from 45 mph to 35 mph.

REVIEW

Stafford Street Extension is maintained by NCDOT from Sutherland Ave to Morgan Mill Rd and currently has a 45-mph speed limit. Fed Ex is located on the west side of Stafford St Ext just north of Sutherland Ave and another industrial complex is proposed across the street with three future buildings. The proposed layout for the new industrial site has the new driveway along Stafford St Ext located directly across from Fed Ex's existing driveway. The developer is experiencing some challenges obtaining a driveway permit from NCDOT due to some sight distance limitations and is requesting assistance from the city for the speed limit reduction. The speed limit reduction would help alleviate the sight distance limitations.

Stafford St Ext from US 74 to Sutherland Ave is maintained by the City and the current speed limit is 35 mph. In addition, as you head north on Stafford St Ext from Sutherland Ave, there is an existing sharp curve with a warning advisory speed of 25 mph. Therefore, Staff believes the requested speed limit reduction from 45 mph to 35 mph is reasonable. Resolution R-2026-49 formalizing the request for the speed limit reduction to NCDOT is attached.

RECOMMENDATION

Staff recommends approval of the attached Resolution R-2026-49 requesting NCDOT to reduce the speed limit on Stafford St Ext from Sutherland Ave to the northern City Limits from 45 mph to 35 mph. If the Public Safety Committee is in agreement, the proposed Resolution R-2026-49 will be placed on the consent agenda for City Council approval on August 11, 2026.

Attachments:
Map
Resolution R-2026-49

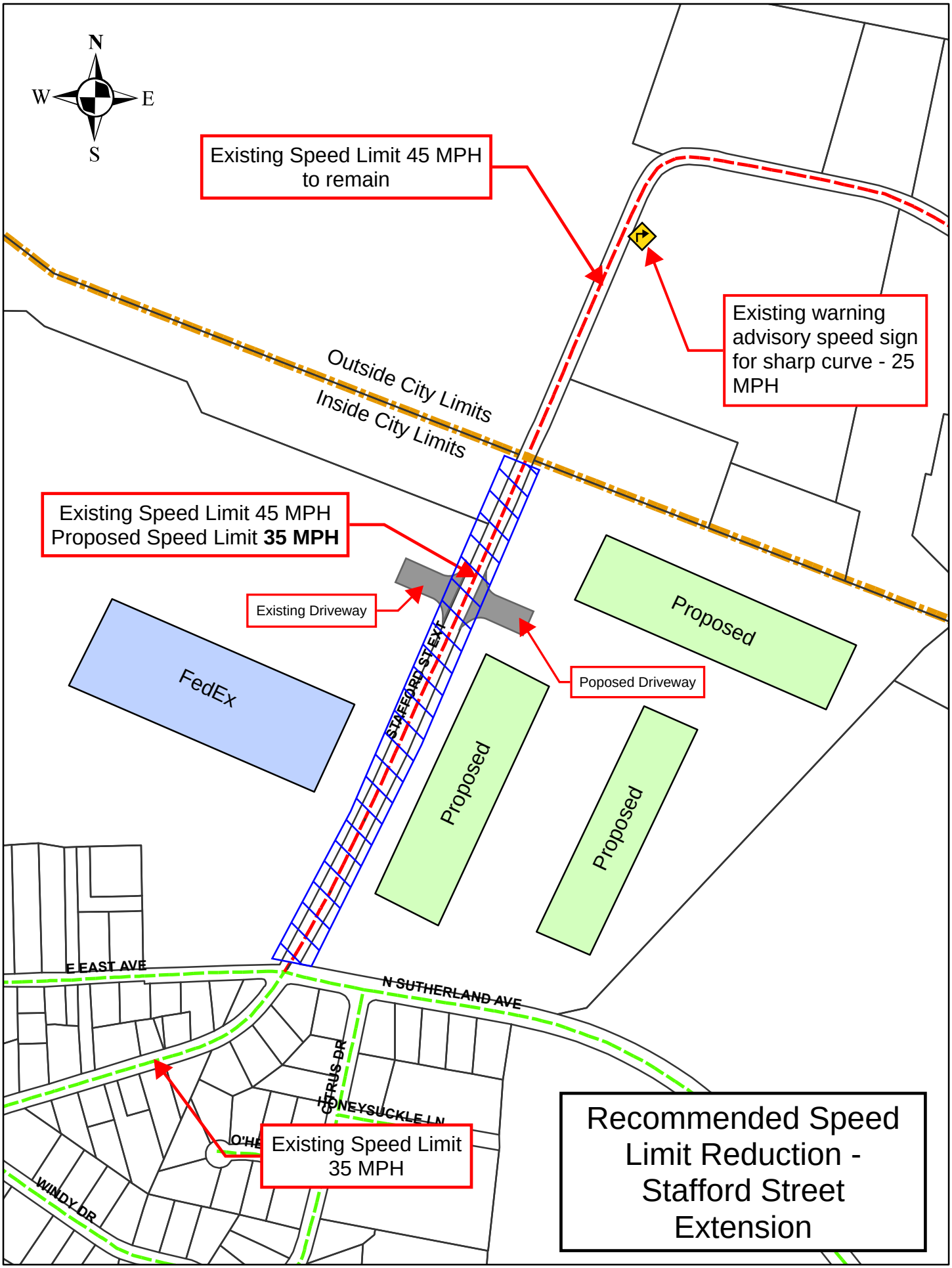
N
W
E
S
Existing Speed Limit 45 MPH to remain
Existing warning advisory speed sign for sharp curve - 25 MPH
Outside City Limits
Inside City Limits
Existing Speed Limit 45 MPH
Proposed Speed Limit **35 MPH**
Existing Driveway
Poposed Driveway
FedEx
Proposed
Proposed
Proposed
STAFFORD ST EXT
E EAST AVE
N SUTHERLAND AVE
CITRUS DR
HONEYSUCKLE LN
WINDY DR
Existing Speed Limit 35 MPH
Recommended Speed Limit Reduction - Stafford Street Extension

RESOLUTION TO REQUEST SPEED LIMIT REDUCTION ON STAFFORD ST EXT FROM SUTHERLAND AVE TO THE NORTHERN CITY LIMITS
R-2026-49

WHEREAS, Stafford Street Extension from Sutherland Avenue to the northern City Limits has an existing and rapidly developing industrial use; and,

WHEREAS, the existing speed limit from Sutherland Avenue to Morgan Mill Road is 45 mph; and,

WHEREAS, the existing speed limit from US 74 to Sutherland Avenue is 35 mph; and

WHEREAS, as you approach the north end of the City Limits on Stafford Street Extension, there is an existing sharp curve with a warning advisory speed of 25 mph; and,

WHEREAS, the City would like to provide a uniform speed limit within the City Limits for Stafford Street Extension; and,

NOW, THEREFORE, BE IT RESOLVED BY THE CITY COUNCIL OF MONROE that the Monroe City Council formally requests the North Carolina Department of Transportation to reduce the speed limit on Stafford Street Extension from Sutherland Avenue to the northern City Limits from 45 mph to 35 mph.

Adopted this the 11th day of August, 2026.

_____
Robert A. Burns, Mayor

Attest:

_____
Bridgette H. Robinson, City Clerk

STAFF REPORT

TO: Public Safety Committee

VIA: Mark Watson, City Manager

DATE: August 3, 2026

FROM: Lisa Stiwinter, Planning and Development Director

PREPARED BY: Bryson Hester, Transportation Planner

SUBJECT: NCDOT Betterment Agreement for Aesthetic Wall Enhancements-Concord Avenue Bridge Replacement (TIP No. BR-0049)

SUMMARY STATEMENT

The Public Safety Committee request City Council approve a Betterment Agreement with the North Carolina Department of Transportation for aesthetic enhancements associated with the replacement of the Concord Avenue bridge over US 74/NC 200 and authorize the City Manager to execute the agreement. The City's estimated cost is $129,660, with the final amount based on actual project costs.

REVIEW

Background

NCDOT is advancing TIP Project BR-0049, which will replace Bridge No. 890034 carrying Concord Avenue over US 74/NC 200. As part of the bridge design process, the city requested aesthetic wall enhancements that provide an improved gateway appearance and match the colors and materials already being used along the Monroe Expressway. The aesthetic wall enhancements are not included in the original bridge scope for NDOT therefore the city is responsible for 100% of the additional cost. The aesthetic wall enhancement request was presented to City Council in January 2025 and City Council provided a recommendation in support.

The proposed aesthetic package includes **brick-pattern architectural treatments on the mechanically stabilized earth walls**, **sandstone, red and dark-bronze coatings on designated**

bridge elements, and **two City of Monroe medallions**. The preliminary estimates include $107,776 for color staining, $4,000 for the two medallions and $17,884 for engineering and contingency costs, for a total estimated betterment cost of $129,660.

Agreement Terms
Under the agreement, NCDOT will incorporate the aesthetic enhancements into the project plans and construction contract and will be responsible for the design, biding, construction and administration of the project.

The city will be responsible for 100% of the actual cost of the additional aesthetic work. NCDOT will invoice the city following completion of the project and payment will be due within 60 days of invoicing. The estimated cost is subject to change based on final bid prices and actual construction costs.

Following completion, the city will be responsible for maintaining the aesthetic treatments, including future staining or recoloring, and the portions of sidewalk located at the ends of the bridge. NCDOT will remain responsible for the structural maintenance of the MSE walls, the sidewalk located on the bridge and the roadway improvements within the State-maintained right-of-way.

Fiscal Impact:
The current estimated cost to the city is $129,660 that will be paid out of the Concord Revitalization Project funds. Because the agreement requires the city to pay actual project costs, the final amount may vary from the estimate.

RECOMMENDATION

Staff recommends that the Public Safety Committee request that City Council approve the Betterment Agreement with NCDOT for the Concord Avenue bridge aesthetic enhancements and authorize the City Manager to execute the agreement and any related documents on behalf of the city.

Attachment(s):
Draft NCDOT Betterment Agreement- TIP Project BR-0049
Bridge Aesthetics Preliminary Betterment Cost Report

AGREEMENT OVERVIEW

NORTH CAROLINA
UNION COUNTY

DATE: 7/1/2026

PARTIES TO THE AGREEMENT:

NORTH CAROLINA DEPARTMENT OF TRANSPORTATION

AND

CITY OF MONROE

PROJECT NUMBERS:

TIP #: BR-0049

WBS ELEMENTS: CON 67049.3.1

The purpose of this Agreement is to identify the participation in project costs, project delivery and/or maintenance, by the other party to this Agreement, as further defined in this Agreement.

SCOPE OF TIP PROJECT ("Project"): This Project consists of replacing Bridge 890034 on Concord Avenue over US 74 / NC 200.

ADDITIONAL WORK ("Additional Work"): Bridge aesthetics including color staining and 2 medallions for the MSE Walls.

ESTIMATED COST OF THE ADDITIONAL WORK: $129,660
COSTS TO OTHER PARTY: $129,660
DEPARTMENT'S FUNDING: $0

PAYMENT TERMS: The Department will invoice the City of Monroe upon completion of the Project.

MAINTENANCE: Both the Department and City of Monroe

EFFECTIVE DATES OF AGREEMENT:
START: Upon Full Execution of this Agreement
END: When work is complete and all terms are met.

This Agreement is made and entered into on the last date executed below, by and between the North Carolina Department of Transportation, an agency of the State of North Carolina, hereinafter referred to as the **Department** and the City of Monroe, hereinafter referred to as the **Municipality**; and collectively referred to as the **Parties**.

The **Parties** to this Agreement, listed above, intend that this Agreement, together with all attachments, schedules, exhibits, and other documents that both are referenced in this

Agreement and refer to this Agreement, represents the entire understanding between the **Parties** with respect to its subject matter and supersedes any previous communication or agreements that may exist.

DRAFT

I. WHEREAS STATEMENTS

WHEREAS, this Agreement is made under the authority granted to the **Department** by the North Carolina General Assembly under General Statutes of North Carolina (NCGS), particularly Chapter 136-66.1 and 136-66.3; and,

WHEREAS, the **Department** and the **Municipality** have agreed that the jurisdictional limits of the **Parties**, as of the date of entering the agreement for the Additional Work, are to be used in determining the duties, responsibilities, rights, and legal obligations of the **Parties** hereto for the purposes of this Agreement; and,

WHEREAS, the **Municipality** has requested that the **Department** perform all phases of said Additional Work or provide services; and,

WHEREAS, the **Parties** hereto wish to enter into an agreement for Additional Work to be performed or provided by the **Department** (including reviews, goods, or services) with reimbursement for the costs thereof by the **Municipality** as hereinafter set out.

NOW, THEREFORE, this Agreement states the promises and undertakings of each of the **Parties** as herein provided, and the **Parties** do hereby covenant and agree, each with the other, as follows:

II. RESPONSIBILITIES

A. DEPARTMENT

The **Department** shall be responsible for all phases of project delivery to include planning, design, right of way acquisition, utility relocation, and construction as shown in the **PROJECT DELIVERY REQUIREMENTS FOR ADDITIONAL WORK** Provision.

B. MUNICIPALITY

The **Municipality** shall be responsible for maintenance as shown in the **PROJECT DELIVERY REQUIREMENTS FOR ADDITIONAL WORK** Provision and payment as shown in the **COSTS AND FUNDING FOR ADDITIONAL WORK** Provision.

III. PROJECT DELIVERY REQUIREMENTS FOR ADDITIONAL WORK

A. PLANNING, DESIGN, AND CONSTRUCTION

i. The **Department** will be responsible for preparing the environmental and/or planning document and obtaining any environmental permits.

ii. The **Department** will be responsible for preparing the project plans and specifications and letting the Project to construction.

iii. The **Department** shall construct the Additional Work in accordance with the plans and specifications for the Project. The **Department** shall administer the construction contract for said Project. All work shall be done in accordance with Departmental standards, specifications, policies, and procedures.

B. RIGHT OF WAY ACQUISITION

The **Department** will be responsible for acquiring any needed right of way required for the Project in accordance with the policies and procedures set forth in the North Carolina Right of Way Manual.

C. MUNICIPAL UTILITY RELOCATIONS

Responsibilities

The **Municipality** shall be responsible for the relocation and adjustment of all municipally owned utilities in conflict with the Project and shall exercise any rights that it may have under any franchise to effect all necessary changes, adjustments, and relocations of communications and electric power lines; underground cables, gas lines, and, and other pipelines or conduits; or any privately- or publicly-owned utilities.

i. Said work shall be performed in a manner satisfactory to the **Department** prior to the **Department** beginning construction of the Project. The **Municipality** shall make every effort to promptly relocate said utilities in order that the **Department** will not be delayed in the construction of the Project.

ii. The **Municipality** shall make all necessary adjustments to house or lot connections or services lying within the right of way or construction limits, whichever is greater, of the Project.

iii. The **Department**, where necessitated by construction, will make vertical adjustments of two (2) feet or less to the existing manholes, meter boxes, and valve boxes at no expense to the **Municipality**.

iv. The **Department** shall not be liable for any work that the **Municipality** undertakes with respect to said utility relocation.

Costs and Funding

v. If applicable, the **Department** will reimburse the **Municipality** in accordance with NCGS 136-27.1. A separate utility agreement may be prepared to address these costs and payment terms.

DRAFT

Utility Relocation by Department

vi. If the **Municipality** requests the **Department** to include the relocation and/or adjustment of municipally owned utilities in its construction contract provisions, and the **Department** agrees, then a separate utility agreement will be prepared to state the cost estimate and the reimbursement terms, if applicable. The **Municipality** shall reimburse the **Department** all or a portion of the costs associated with said relocation, in accordance with NCGS 136-27.1. Reimbursement will be based on final project plans and actual costs of relocation.

D. MAINTENANCE

Upon completion of the Project:

i. The **Municipality** shall be responsible for maintaining the aesthetics and/or stain/recoloring repairs that are needed. The **Municipality** shall also maintain the sidewalk on Concord Avenue at the ends of bridge.

ii. The Department shall be responsible for maintaining the MSE wall other than the aesthetics, and the sidewalk located on the bridge.

iii. The **Department** shall be responsible for all traffic operating controls and devices which shall be established, enforced, and installed and maintained in accordance with the North Carolina General Statutes, the latest edition of the Manual on Uniform Traffic Control Devices for Streets and Highways, the latest edition of the "Policy on Street and Driveway Access to North Carolina Highway," and department criteria.

iv. The roadway improvements that are within state-owned right of way shall be considered a part of the State Highway System and shall be owned and maintained by the **Department**.

IV. COSTS AND FUNDING FOR ADDITIONAL WORK

A. ADDITIONAL WORK COSTS

At the request of the **Municipality** and in accordance with the **Department's** Pedestrian Policy Guidelines or the Complete Streets Guidelines, the **Department** shall include provisions in its construction contract for the construction of pedestrian facilities and/or other Additional Work as indicated in the Table below. Said work shall be performed in accordance with the **Department's** policies, procedures, standards, and specifications, and the provisions of this Agreement.

Description	Cost to Municipality
Color Staining for MSE Wall	$ 107,776
Medallions (2)	$ 4,000
E&C costs (16%)	$ 17,884
Total Estimated Cost to Municipality	**$ 129,660**

B. ADDITIONAL WORK FUNDING AND PAYMENT

The **Municipality** has agreed to participate in the Additional Work costs as follows:

i. The estimated cost of the Additional Work is $129,660. The **Municipality** shall participate in 100% of actual costs. The **Department** will participate in 0% of actual costs. Both **Parties** understand that this is an estimated cost and is subject to change.

ii. The **Department** may consult with the **Municipality** on changes to cost estimates prior to construction, or changes to costs during construction. Consultation between the **Department** and the **Municipality** is offered as a courtesy to apprise the **Municipality** of potential cost increases and to allow appropriate budgeting. Failure of the **Department** to notify the **Municipality** of cost increases does not affect the payment terms of the agreement.

C. PAYMENT BY THE MUNICIPALITY

i. Upon completion of the Project, the **Department** will calculate actual costs and bill the **Municipality** per the **COSTS AND FUNDING FOR ADDITIONAL WORK** Provision. The **Municipality** shall reimburse the **Department** within sixty (60) days of invoicing by the **Department**. The **Department** will charge a late payment penalty and interest on any unpaid balance due in accordance with G. S. 147-86.23.

ii. At any time prior to final billing by the **Department**, the **Municipality** may prepay any portion of the estimated cost by sending payment in accordance with the attached "Remittance Guidance". The **Department** will provide a final billing based on the fixed cost, less any previous payments that have been made.

iii. In the event the **Municipality** fails for any reason to pay the **Department** in accordance with the provisions for payment hereinabove provided, North Carolina General Statute 136-41.3 authorizes the **Department** to withhold so much of the **Municipality's** share of funds allocated to said **Municipality** by North Carolina General Statute, Section 136-41.1, until such time as the **Department** has received payment in full.

V. STANDARD PROVISIONS

A. AGREEMENT MODIFICATIONS

Any modification to scope, funding, responsibilities, or time frame will be agreed upon by all **Parties** by means of a written Supplemental Agreement.

B. ASSIGNMENT OF RESPONSIBILITIES

The **Department** must approve any assignment or transfer of the responsibilities of the **Municipality** set forth in this Agreement to other parties or entities.

C. AGREEMENT FOR IDENTIFIED PARTIES ONLY

This Agreement is solely for the benefit of the identified **Parties** to the Agreement and is not intended to give any rights, claims, or benefits to third parties or to the public at large.

D. OTHER AGREEMENTS

The **Municipality** is solely responsible for all agreements, contracts, and work orders entered into or issued by the **Municipality** to meet the terms of this Agreement. The **Department** is not responsible for any expenses or obligations incurred for the terms of this Agreement except those specifically eligible for the funds and obligations as approved by the **Department** under the terms of this Agreement.

E. TITLE VI

The other party to this Agreement shall comply with Title VI of the Civil Rights Act of 1964 (Title 49 CFR, Subtitle A, Part 21) and related nondiscrimination authorities. Title VI and related authorities prohibit discrimination on the basis of race, color, national origin, disability, gender, and age in all programs or activities of any recipient of Federal assistance.

F. AUTHORIZATION TO EXECUTE

The **Parties** hereby acknowledge that the individual executing this Agreement has read this Agreement, conferred with legal counsel, fully understands its contents, and is authorized to execute this Agreement and to bind the respective **Parties** to the terms contained herein.

G. DEBARMENT POLICY

It is the policy of the **Department** not to enter into any agreement with parties that have been debarred by any government agency (Federal or State). By execution of this agreement, the **Municipality** certifies that neither it nor its agents or contractors are presently debarred, suspended, proposed for debarment, declared ineligible or voluntarily excluded from participation in this transaction by any Federal or State Agency or Department and that it will

DRAFT

not enter into agreements with any entity that is debarred, suspended, proposed for debarment, declared ineligible or voluntarily excluded from participation in this transaction.

H. INDEMNIFICATION

The **Municipality** will indemnify and hold harmless the FHWA (if applicable), the **Department** and the State of North Carolina, their respective officers, directors, principals, employees, agents, successors, and assigns from and against any and all claims for damage and/or liability, including those that may be initiated by third parties, in connection with the Project activities performed pursuant to this Agreement including construction of the Project, except for those claims arising out of the errors, omissions, or negligence of the **Department**, its respective officers, directors, principals, employees, agents, successors, and assigns.

I. AVAILABILITY OF FUNDS

All terms and conditions of this Agreement are dependent upon, and, subject to the allocation of funds for the purpose set forth in the Agreement and the Agreement shall automatically terminate if funds cease to be available.

J. COUNTERPARTS AND ELECTRONIC SIGNATURES

i. This Agreement, and other documents to be delivered pursuant to this Agreement, may be executed in one or more counterparts, each of which will be deemed to be an original copy and all of which, when taken together, will be deemed to constitute one and the same agreement or document and will be effective when counterparts have been signed by each of the **Parties**. An image of a manual signature on this Agreement, or other documents to be delivered pursuant to this Agreement, will constitute an original signature for all purposes. The delivery of copies of this Agreement or other documents to be delivered pursuant to this Agreement, including executed signature pages where required, by electronic transmission will constitute effective delivery of this Agreement or such other document for all purposes.

ii. The **Parties** hereto further acknowledge and agree that this Agreement may be signed and/or transmitted by email or a PDF document or using electronic signature technology (e.g. DocuSign, Adobe Sign, or other electronic signature technology), and that such signed record shall be valid and as effective to bind the **Party(ies)** so signing as a paper copy bearing a handwritten signature. By selecting "I Agree", "I Accept", or other similar item, button, or icon via use of a keypad, mouse, or other device, as part of the electronic signature technology, the **Parties** consent to be legally bound by the terms and conditions of Agreement and that such act constitutes a signature as if actually signed in writing. The **Parties** also agree that no certification authority or other third-party verification is necessary to validate its electronic signature and that the lack of such certification or third-party verification will not in any way affect the enforceability of its electronic signature. The **Parties** acknowledge and agree that delivery of a copy of this Agreement or any other

document contemplated hereby through the electronic signature technology, will have the same effect as physical delivery of the paper document bearing an original written signature.

K. GIFT BAN

By Executive Order 24, issued by Governor Perdue, and NCGS 133-32, it is unlawful for any vendor or contractor (i.e. architect, bidder, contractor, construction manager, design professional, engineer, landlord, offeror, seller, subcontractor, supplier, or vendor), to make gifts or to give favors to any State employee of the Governor's Cabinet Agencies (i.e. Administration, Adult Corrections, Commerce, Environmental Quality, Health and Human Services, Information Technology, Military and Veterans Affairs, Natural and Cultural Resources, Public Safety, Revenue, Transportation, and the Office of the Governor).

DRAFT

SIGNATURE PAGE

IN WITNESS WHEREOF, this Agreement has been executed the day and year heretofore set out, on the part of the **Department** and the **Municipality** by authority duly given.

(DOCUSIGN ONLY)

CITY OF MONROE

Authorized Signer: _____

Print Name: _____

Title: _____

Date Signed: _____

If applicable, this Agreement has been pre-audited in the manner required by the Local Government Budget and Fiscal Control Act:

Finance Signer: _____

Print Name: _____

Title: _____

Date Signed: _____

Fed Tax ID No: _____

Remittance Address:

_____

_____

DEPARTMENT OF TRANSPORTATION

By: _____

Print Name: _____

Title: _____

Date: _____

APPROVED BY BOARD OF TRANSPORTATION ITEM O: _____ (DATE)

DRAFT

SIGNATURE PAGE

IN WITNESS WHEREOF, this Agreement has been executed the day and year heretofore set out, on the part of the **Department** and the **Municipality** by authority duly given.

(INK SIGNATURES)

CITY OF MONROE

Attest:

By: _____

Title: _____

Authorized Signer: _____

Print Name: _____

Title: _____

Date Signed: _____

If applicable, this Agreement has been pre-audited in the manner required by the Local Government Budget and Fiscal Control Act:

Fed Tax ID No: _____

Remittance Address:

_____

_____

Finance Signer: _____

Print Name: _____

Title: _____

Date Signed: _____

(DOCUSIGN)

DEPARTMENT OF TRANSPORTATION

By: _____

Print Name: _____

Title: _____

Date: _____

APPROVED BY BOARD OF TRANSPORTATION ITEM O: _____ (DATE)

DRAFT

STAFF REPORT

TO: Public Safety Committee

VIA: Mark Watson, City Manager

DATE: August 3, 2026

FROM: Lisa Stiwinter, Planning and Development Director

PREPARED BY: Bryson Hester, Transportation Planner

SUBJECT: Budget Ordinance and NCDOT Municipal Agreement for the Circle Drive Shared-Use Path Project

---

SUMMARY STATEMENT

The Public Safety Committee is requested to recommend City Council approve the attached Budget Ordinance and North Carolina Department of Transportation (NCDOT) Municipal Agreement for the Circle Drive Shared-Use Path following Monroe's award of CRTPO discretionary grant funding.

REVIEW

Background:
In February of 2026, the City of Monroe was awarded grant funding through the CRTPO Discretionary Grant Program, for the Circle Drive Shared-Use Path, which will add an approximately 0.48-mile, 8-foot ADA compliant, shared-use path along one side of Circle Drive between E. Franklin Street and Sunset Dr.

This project is intended to improve safety and access along a corridor that currently has a gap in pedestrian infrastructure. It will help nearby neighborhoods and key destinations such as Monroe High School, East Elementary School, Atrium Health Union and nearby churches and community facilities.

The attached Budget Ordinance is the first step needed to officially set up the project in the City's financial system. This action will recognize the outside grant funds and appropriate the City's required local match.

The attached Municipal Agreement is the formal agreement required for the City to proceed with project administration under NCDOT's local programs process. Approval of the agreement will allow the City to continue with project setup and the next implementation steps in accordance with applicable grant requirements.

The total project budget is **$2,284,383**, consisting of:
Grant Funds: $1,713,287
City Match: $571,096

The project will operate on a reimbursement basis meaning the City will pay eligible costs upfront and then request reimbursement for the grant-funded share as the project moves forward. The city's matching funds will come from the Engineering Department Sidewalk Construction fund that currently has $854,780 available.

The approval of these items does not award a construction contract at this time. It simply establishes the project budget and authorizes execution of the required agreement so the project can proceed to the next phase.

RECOMMENDATION

Staff recommends the Public Safety Committee forward this item to City Council to approve the attached Budget Ordinance and NCDOT Municipal Agreement for the Circle Drive Shared-Use Path.

Attachment(s):

Capital Project Budget Ordinance Circle Drive SUP BO-2026-
CRTPO Awarded Discretionary Grant Projects-Media Release
Circle Drive Study Area Layout

CITY OF MONROE, NORTH CAROLINA
CAPITAL PROJECT BUDGET ORDINANCE
CRTPO DISCRETIONARY BICYCLE & PEDESTRIAN PROGRAM: CIRCLE DRIVE SHARED-USE PATH
BO-2026-15

WHEREAS, the City of Monroe has been awarded federal funding through the Charlotte Regional Transportation Planning Organization (CRTPO) Discretionary Grant Bicycle and Pedestrian Program for the Circle Drive Shared-Use Path project; and

WHEREAS, the project scope consists of constructing an approximately 8-foot-wide ADA accessible shared-use path along one side of Circle Drive between E. Franklin Street and Sunset Drive; and

WHEREAS, the City of Monroe has been designated as a recipient to receive funds with the grant providing a Federal Share of $1,713,287 along with a required a local share of $571,096 for a total project budget of $2,284,383; and

WHEREAS, the City's required local share will be transferred from the existing Sidewalk Construction Project RD1701 in order to establish the full project budget and proceed with general implementation activities;

WHEREAS, the project will extend across multiple fiscal years and the City desires to establish a dedicated capital project account for accounting, tracking and reporting purposes and to appropriate the grant revenues and expenditures necessary to procure professional services and complete the project in accordance with federal requirements.

NOW, THEREFORE, BE IT ORDAINED that the City Council of the City of Monroe establishes capital project RD2602 for the Circle Drive Shared Use Path, as follows:

General Capital Projects Fund:

Expenditures – RD1701:	
Transfer to RD2602- Circle Drive SUP (Match)	$571,096
Sidewalk Construction	($571,096)
Revenues - RD2602:	
Restricted Intergovernmental – CRTPO Discretionary Grant	$1,713,287
Transfer from RD1701- Circle Drive Shared-Use Path (Match)	$571,096
Expenditures – RD2602:	
Circle Drive Shared-Use Path Project Costs	$2,284,383

BE IT FURTHER ORDAINED that an amendment to the General Capital Projects Fund Budget for FY 2026-27 is approved to establish the Circle Drive Shared-Use Path project in the total amount of $2,284,383.

Adopted this 11th day of August, 2026.

Attest:

Robert Burns, Mayor

Bridgette H. Robinson, City Clerk

Executive Summary

The Executive Summary is a summation of this agreement and is not intended to be used as the agreement between the Department (North Carolina Department of Transportation) and the Party (Entity).

Entity: City of Monroe **County:** Union

TIP: BL-0182

Project: Circle Drive Shared-Use Path

Scope: design and construction of a shared-use path along SR 2102 (Circle Drive) from SR 2100 (East Franklin Street) to SR 2181 (East Sunset Drive).

Eligible Activities:

PE	52194.1.1	Design Environmental
ROW	52194.2.1	ROW Acquisition
UTIL	52194.2.2	Utility
CON	52194.3.1	Construction
OTHER	_____	
FEDERAL-AID	5219401	

Fund Source	Federal Funds Amount	Reimbursement Rate	Non-Federal Match $	Non-Federal Match Rate
Surface Trans. Block Grant - DA (STBG-DA)	$1,713,287	75 %	$571,096	25 %
Total Available Funding		**$2,284,383**		

Responsibility: The City of Monroe shall be responsible for all aspects of the project.

Agreement ID # 13660

NORTH CAROLINA

LOCALLY ADMINISTERED PROJECT - FEDERAL

UNION COUNTY

DATE: 7/14/2026

NORTH CAROLINA DEPARTMENT OF TRANSPORTATION

TIP #:	BL-0182	
WBS Elements:	PE	52194.1.1
	ROW	52194.2.1
	UTIL	52194.2.2
	CON	52194.3.1
OTHER FUNDING:		_____
FEDERAL-AID NUMBER:		5219401
AFN #:	20.287	
Total Funds [NCDOT Participation]	$1,713,287	

AND

CITY OF MONROE

THIS AGREEMENT is made and entered into on the last date executed below, by and between the North Carolina Department of Transportation, an agency of the State of North Carolina, hereinafter referred to as the "Department" and the City of Monroe, hereinafter referred to as the "Municipality".

W I T N E S S E T H:

WHEREAS, the Infrastructure Investment and Jobs Act (IIJA) allows for the allocation of federal funds to be available for certain specified transportation activities; and,

WHEREAS, the Municipality has requested federal funding for Circle Drive Shared-Use Path, hereinafter referred to as the Project, in Union County, North Carolina; and,

WHEREAS, subject to the availability of federal funds, the Municipality has been designated as a recipient to receive funds allocated to the Department by the Federal Highway Administration (FHWA) up to and not to exceed the maximum award amount of $1,713,287 for the Project; and,

WHEREAS, the Department has agreed to administer the disbursement of said funds on behalf of FHWA to the Municipality for the Project in accordance with the Project scope of work and in accordance with the provisions set out in this Agreement; and,

WHEREAS, the Department has programmed funding in the approved State Transportation Improvement Program (STIP) for the Project; and,

WHEREAS, the governing board of the Municipality has agreed to participate in certain costs and to assume certain responsibilities in the manner and to the extent as hereinafter set out; and,

WHEREAS, this Agreement is made under the authority granted to the Department by the North Carolina General Assembly including, but not limited to, the following applicable legislation: General Statutes of North Carolina (NCGS) Section 136-66.1, Section 136-71.6, Section 160A-296 and 297, Section 136-18, Section 136-41.3 and Section 20-169, to participate in the planning, construction and/or implementation of the Project approved by the Board of Transportation.

NOW, THEREFORE, this Agreement states the promises and undertakings of each party as herein provided, and the parties do hereby covenant and agree, each with the other, as follows:

1. GENERAL PROVISIONS

FEDERAL FUNDING ACCOUNTABILITY AND TRANSPARENCY ACT

All parties to this Agreement, including contractors, subcontractors, and subsequent workforces, associated with any work under the terms of this Agreement shall provide reports as required by the Federal Funding Accountability and Transparency Act (FFATA) for this Project.

AGREEMENT MODIFICATIONS

Any modification to scope, funding, responsibilities, or time frame will be agreed upon by all parties by means of a Supplemental Agreement.

LOCAL PUBLIC AGENCY TO PERFORM ALL WORK

The Municipality shall be responsible for administering all work performed and for certifying to the Department that all terms set forth in this Agreement are met and adhered to by the Municipality and/or its contractors and agents. The Department will provide technical oversight to guide the Municipality. The Department must approve any assignment or transfer of the responsibilities of the Municipality set forth in this Agreement to other parties or entities.

PERSON IN RESPONSIBLE CHARGE

The Municipality shall designate a person or persons to be in responsible charge of the Project, in accordance with Title 23 of the Code of Federal Regulations, Part 635.105. The person, or persons, shall be expected to:

- Administer governmental project activities, including those dealing with cost, time, adherence to contract requirements, construction quality and scope of Federal-aid projects;

- Maintain knowledge of day to day project operations and safety issues;
- Make or participate in decisions about changed conditions or scope changes that require change orders or supplemental agreements;
- Visit and review the project in accordance with the project scope and scale;
- Review financial processes, transactions and documentation to reduce the likelihood of fraud, waste, and abuse;
- Direct project staff, agency or consultant, to carry out project administration and contract oversight, including proper documentation; and
- Be aware of the qualifications, assignments and on-the-job performance of the agency and consultant staff at all stages of the project.

The person in responsible charge must be a full-time employee of the Municipality, but the duties may be split among several employees, if necessary.

COMPLIANCE WITH STATE/FEDERAL POLICY

The Municipality, and/or its agent, including all contractors, subcontractors, or sub-recipients shall comply with all applicable Federal and State policies and procedures, stated both in this Agreement and in the Department's guidelines and procedures, including the *Local Programs Management Handbook*.

FAILURE TO COMPLY - CONSEQUENCES

Failure on the part of the Municipality to comply with any of the provisions of this Agreement will be grounds for the Department to terminate participation in the costs of the Project and, if applicable, seek repayment of any reimbursed funds.

2. SCOPE OF PROJECT

The Project consists of design and construction of a shared-use path along SR 2102 (Circle Drive) from SR 2100 (East Franklin Street) to SR 2181 (East Sunset Drive).

The Department's funding participation in the Project shall be restricted to the following eligible items:

- Design
- Environmental Documentation
- ROW Acquisition
- Utility Relocation
- Construction

as further set forth in this Agreement.

3. FUNDING

PROGRAMMING AND AUTHORIZATION OF FEDERAL FUNDS

The funding currently programmed for the project in the State Transportation Improvement Program (STIP) is Surface Trans. Block Grant - DA (STBG-DA). The funding source may be modified with the coordination and approval of the respective Metropolitan Planning Organization (MPO) and/or the Department prior to authorization of funds. The Department will authorize and reimburse federal funding based on the type of federal funding that is programmed in the STIP at the time of the authorization request. The Department will notify the Municipality of the type of federal funds authorized by issuing a Technical Amendment – Funds Authorization letter. A modification in the source of funds will have no effect on project responsibilities outlined in this agreement.

REIMBURSEMENT FOR ELIGIBLE ACTIVITIES

Subject to compliance by the Municipality with the provisions set forth in this Agreement and the availability of federal funds, the Department shall reimburse 75% of eligible expenses incurred by the Municipality up to a maximum amount of One Million Seven Hundred Thirteen Thousand Two Hundred Eighty Seven Dollars ($1,713,287), as detailed below. The Municipality shall provide the non-federal match, as detailed in the FUNDING TABLE below, and all costs that exceed the total available funding.

FUNDING TABLE

Fund Source	Federal Funds Amount	Reimbursement Rate	Non-Federal Match $	Non-Federal Match Rate
(STBG-DA)	$1,713,287	75%	$571,096	25%
Total Available Funding		**$2,284,383**		

WORK PERFORMED BY NCDOT

All work performed by the Department on this Project, including, but not limited to, reviews, inspections, and Project oversight, during any phase of the delivery of the Project, shall reduce the funding available to the Municipality under this Agreement. The Department will set aside, but is not limited to, ten percent (10%) of the total available funding, or $228,438, to use towards the costs related to review and oversight of this Project. These costs may include but are not limited to: review and approval of plans, environmental documents, contract proposals, and engineering estimates; performance of any phase of work, for example, contract administration or construction engineering and inspection; oversight of any phases; or any other items as needed to ensure the Municipality's appropriate compliance with state and federal regulations.

In the event that the Department does not utilize all the set-aside funding, then those remaining funds will be available for reimbursement to the Municipality at the above reimbursement rate. For all costs of work performed on the Project, whether incurred by the Municipality or by the Department, the Municipality shall provide the non-federal match. The Department will bill the Municipality for the non-federal match of any costs that the Department incurs on the Project and for any costs that exceed the total available funding.

4. PERIOD OF PERFORMANCE

COMPLETION DATE

The Municipality has five (5) years to complete all work outlined in the Agreement from the date of authorization of Federal funds for the initial phase of work. Completion for this Agreement is defined as completion of all construction activities or implementation activities, acceptance of the project, and submission of a final reimbursement package to the Department.

MILESTONE DATES AND REVISIONS

The Municipality is responsible for regularly updating project milestones throughout the life of the project. If project milestones are near (or have passed without completion) and have not been updated to a realistic schedule by the Municipality, the Department reserves the right to revise the milestones accordingly. Revisions by the Department could lead to milestones being pushed into another fiscal year resulting in a change to the STIP. The Department is not responsible for project delays caused by these milestone revisions.

EXTENDING COMPLETION DATE

If additional time is needed to complete the Project, then a supplemental agreement must be executed. The Department may allow up to three additional months for submission of final reimbursement package by the Municipality, without entering into a supplemental agreement. The Department and/or FHWA reserves the right to revoke the funds awarded if the Municipality is unable to meet milestone dates included herein.

5. PRELIMINARY ENGINEERING AUTHORIZATION

If Preliminary Engineering is an eligible expense, then upon receipt of an executed agreement, the Department will authorize Preliminary Engineering funds and shall notify the Municipality, in writing, once funds have been authorized and can be expended. The Municipality shall not initiate any work, nor solicit for any professional services prior to receipt of written authorization from the Department to proceed. Any work performed, or contracts executed, prior to receipt of written authorization to proceed will be ineligible for reimbursement.

6. PROFESSIONAL AND ENGINEERING SERVICES

The Municipality shall comply with the policies and procedures of this provision if the Municipality is requesting reimbursement for the Preliminary Engineering contract or the Construction Contract Administration / Construction Engineering and Inspection contract.

PROCUREMENT POLICY

When procuring professional services, the Municipality must adhere to Title 2 Code of Federal Regulations Part 200; Title 23 of the Code of Federal Regulations, Part 172; Title 40 United States Code, Chapter 11, Section 1101-1104; NCGS 143-64.31; and the Department's *Policies and Procedures for Major Professional or Specialized Services Contracts*. Said policies and standards are incorporated in this Agreement by reference at www.fhwa.dot.gov/legsregs/legislat.html and www.ncleg.net/gascripts/Statutes/Statutes.asp.

- The Municipality shall ensure that a qualified firm is obtained through an equitable selection process, and that prescribed work is properly accomplished in a timely manner and at a just and reasonable cost.
- All Professional Services Firms shall be pre-qualified by the Department in the Work Codes advertised.

- A pre-negotiation audit will be conducted by the Department's External Audit Branch. The Municipality shall not execute a consultant contract until the Department's review has been completed.

SMALL PROFESSIONAL AND ENGINEERING SERVICES FIRMS REQUIREMENTS

Any contract entered into with another party to perform work associated with the requirements of this Agreement shall contain appropriate provisions regarding the utilization of Small Professional Services Firms (SPSF). This policy conforms with the SPSF Guidelines as approved by the North Carolina Board of Transportation.

- The Municipality shall not advertise nor enter into a contract for services performed as part of this Agreement, unless the Department provides written approval of the advertisement or the contents of the contract.

- If the Municipality fails to comply with these requirements, the Department will withhold funding until these requirements are met.

WORK BY ENTITY

If the Design, Planning, Contract Administration and/or Construction Engineering and Inspection required for this project will be undertaken by the Municipality, and the Municipality requests reimbursement, then the Municipality must submit a request and supporting documentation to the Department for review and approval, prior to any work being initiated by the Municipality.

7. PLANNING / ENVIRONMENTAL DOCUMENTATION

The Municipality shall prepare the environmental and/or planning document, including any environmental permits, needed to construct the Project, in accordance with the National Environmental Policy Act (NEPA) and all other appropriate environmental laws and regulations. All work shall be performed in accordance with Departmental procedures and guidelines. Said documentation shall be submitted to the Department for review and approval.

- The Municipality shall be responsible for preparing and filing with all proper agencies the appropriate planning documents, including notices and applications required to apply for those permits necessary for the construction of the desired improvements. Copies of approved permits should be forwarded to the Department.

- The Municipality shall advertise and conduct any required public hearings.

- If any permit issued requires that action be taken to mitigate impacts associated with the improvements, the Municipality shall design and implement a mitigation plan. The Department will determine if any mitigation costs are eligible for reimbursement. The Municipality shall bear all costs associated with penalties for violations and claims due to delays.

- The Municipality shall be responsible for designing an erosion control plan if required by the North Carolina Sedimentation Pollution Control Act of 1973, NCGS 113A, Article 4, incorporated in this Agreement by reference at https://www.ncleg.gov/Laws/GeneralStatutes and obtaining those permits required thereby in order to construct the Project. During the construction of the improvements, the Municipality, and its contractors and agents, shall be solely responsible for compliance with the provisions of said Act and the plan adopted in compliance therewith.

8. DESIGN

CONTENT OF PLAN PACKAGE

The Municipality, and/or its agent, shall prepare the Project's plans, specifications, and a professional estimate of costs (PS&E package), in accordance with the Department's guidelines and procedures, and applicable Federal and State standards. All work shall be submitted to the Department for review and approval. The plans shall be completed to show the design, site plans, landscaping, drainage, easements, and utility conflicts.

9. RIGHT OF WAY / UTILITY AUTHORIZATION

If the costs of right of way acquisition or utility relocation are an eligible expense, the Municipality shall submit a letter of request to the Department to authorize and set up right of way and/or utility funding. The acquisition for right of way, construction easements, and/or utility relocation may be undertaken only after the Municipality receives written authorization from the Department to proceed.

10. PROJECT LIMITS AND RIGHT OF WAY (ROW)

The Municipality shall comply with the policies and procedures of this provision regardless of whether the Municipality is requesting reimbursement for the Right of Way phase of the Project.

SPONSOR PROVIDES ROW

The Municipality, at no liability whatsoever to the Department, shall be responsible for providing and/or acquiring any required ROW and/or easements for the Project.

ROW GUIDANCE

The Municipality shall accomplish all ROW activities, including acquisition and relocation, in accordance with the following: Title 23 of the Code of Federal Regulations, Part 710, Subpart B and Title 49 of the Code of Federal Regulations, Part 24, [Uniform Act] incorporated by reference at www.fhwa.dot.gov/legsregs/directives/fapgtoc.htm; NCGS, Chapter 133, Article 2, Sections 133-5 through 133-18, Relocation Assistance, incorporated by reference at https://www.ncleg.gov/Laws/GeneralStatutes ; and the North Carolina Department of Transportation Right of Way Manual.

APPRAISAL

The Municipality shall submit the appraisal to the Department for review and approval in accordance with Departmental policies and procedures.

CLEARANCE OF PROJECT LIMITS / ROW

The Municipality shall remove and dispose of all obstructions and encroachments of any kind or character (including hazardous and contaminated materials) from said ROW, with the exception that the Municipality shall secure an encroachment agreement for any utilities (which shall remain or are) to be installed within the Department's ROW, or follow other applicable approval process, for utilities within the Municipality's ROW. The Municipality shall indemnify and save harmless the Department, Federal Highway Administration, and the State of North Carolina, from any and all damages and claims for damages that might arise on account of said right of way acquisition, drainage, and construction easements for the construction of said Project. The Municipality shall be solely responsible for any damages caused by the existence of said material now and at any time in the future and will save the Department harmless from any legal actions arising as a result

of this contaminated and/or hazardous material and shall provide the Department with documentation proving the proper disposal of said material.

RELOCATION ASSISTANCE

The Municipality shall provide relocation assistance services and payments for families, businesses, and non-profit organizations being displaced by the Project in full accordance with the Federal relocation requirements of Title 49 Code of Federal Regulations, Part 24 [Uniform Act], as amended. Relocation assistance services and payments may be accomplished by contract with any other municipal corporation, or State or Federal agency, rendering such services upon approval by the Department and Federal Highway Administration.

11. UTILITIES

The Municipality, and/or its agent, at no liability to the Department, shall relocate, adjust, relay, change or repair all utilities in conflict with the Project, regardless of ownership. All utility work shall be performed in a manner satisfactory to and in conformance with State and Federal rules and regulations, prior to Municipality beginning construction of the project. This Agreement does not modify or supersede any existing Utility Encroachment Agreements that may be in place.

12. RIGHT OF WAY / UTILITY / RAILROAD CERTIFICATION

The Municipality, upon acquisition of all right of way/property necessary for the Project, relocation of utilities, and coordination with the railroad shall provide the Department all required documentation (deeds/leases/easement/plans/agreements) to secure certification. Certification is only issued after all ROW is in public ownership or property is publicly accessible by a legal document; utilities in conflict with the project are relocated, or a plan for their relocation during construction has been approved; and coordination with the railroad (if applicable) has occurred and been documented.

13. CONTRACT PROPOSAL AND ENGINEER'S ESTIMATE

CONTRACT PROPOSAL

The Municipality shall develop a contract proposal that will be advertised for bids. The proposal shall comply with NCDOT Specifications and Standard Drawings as applicable to the Project. The proposal shall also contain provisions, as applicable, per Title 23 Code of Federal Regulations 633 and 635 to include, but not be limited to: FHWA 1273, Buy America, Davis-

Bacon Wage Rates, Non-discrimination, DBE Assurances, Contractor Certification regarding suspension and debarment, and other provisions as required by the Department.

ENGINEER'S ESTIMATE

The Municipality shall develop an itemized engineer's estimate to show items referenced to the NCDOT Standard Specifications, if applicable, along with units and unit price. The engineer's estimate will be used as the basis for comparing bids received.

14. CONSTRUCTION AUTHORIZATION

The Municipality shall submit the required environmental and/or planning document, ROW certification, final construction plans, total contract proposal, and an estimate of Project costs (final PS&E package) to the Department for review and approval.

- After approval of all documentation, the Department will request construction authorization from the Federal Highway Administration.
- The Municipality shall not advertise for bids prior to receiving written construction authorization from the Department.

15. CONTRACTOR PROCUREMENT

ADVERTISE FOR BIDS

Upon receipt of written construction authorization from the Department, the Municipality may advertise the Project. The Municipality shall follow applicable Federal and/or State procedures pertaining to the advertisement of the Project, bid opening, and award of the contract, according to Title 2 of the Code of Federal Regulations, Part 200 and Title 23 of the Code of Federal Regulations, Part 633 and Part 635, incorporated by reference at www.fhwa.dot.gov/legsregs/directives/fapgtoc.htm; and NCGS, Chapter 143, Article 8 (Public Contracts), incorporated by reference at https://www.ncleg.gov/Laws/GeneralStatutes.

CONSTRUCTION CONTRACTOR REQUIREMENTS

All Contractors submitting bids on the project shall be pre-qualified by the Department. All proposed subcontractors must be pre-qualified before construction work begins. Any subcontractors who are proposed to meet the Disadvantaged Business Enterprise goal must be certified by the Department.

CONSTRUCTION SUBCONTRACTOR REQUIREMENTS

Any contract entered into with another party to perform work associated with the requirements of this Agreement shall contain appropriate provisions regarding the utilization of Disadvantaged Business Enterprises (DBEs), or as required and defined in Title 49 of the Code of Federal Regulations, Part 26 and the North Carolina Administrative Code. These provisions are incorporated into this Agreement by reference https://connect.ncdot.gov/resources/Specifications/Pages/2024-Specifications-and-Special-Provisions.aspx.

- The Municipality shall not advertise nor enter into a contract for services performed as part of this Agreement, unless the Department provides written approval of the advertisement or the contents of the contract.

- If the Municipality fails to comply with these requirements, the Department will withhold funding until these requirements are met.

AWARDING CONTRACT

After the advertisement of the Project for construction bids, the Municipality shall request concurrence from the Department to award the construction contract by submitting a letter along with tabulated bids received depicting Disadvantaged Business Enterprises (DBE) goals, and a resolution recommending award of the Project to the lowest responsible, responsive bidder. The Department will review the submitted information and provide written approval to the Municipality prior to the contract being awarded by the Municipality.

DELAY IN PROCUREMENT

In the event the Project has not been let to contract within six (6) months after receiving construction authorization from the Department, the Municipality shall be responsible for documenting to the Department justification for project delay and that the Project remains in compliance with the terms of this Agreement, the approved plans and specifications, and current codes.

FORCE ACCOUNT

Force account work is only allowed when there is a finding of cost effectiveness for the work to be performed by some method other than a contract awarded by a competitive bidding process, or there is an emergency. Written approval from the Department is required prior to the use of force

account by the Municipality. Federal Highway Administration regulations governing Force Account are contained in Title 23 Code of Federal Regulations, Part 635.201, Subpart B; said policy being incorporated in this Agreement by reference www.fhwa.dot.gov/legsregs/directives/cfr23toc.htm. North Carolina General Statutes governing the use of Force Account, Chapter 143, Article 8 (Public Contracts) can be found at www.ncleg.net/gascripts/Statutes/Statutes.asp.

16. CONSTRUCTION

The Municipality, and/or its agents shall construct the Project in accordance with the plans and specifications of the Project as filed with, and approved by, the Department. During the construction of the Project, the procedures set out below shall be followed:

CONSTRUCTION CONTRACT ADMINISTRATION

The Municipality shall comply with the NCDOT Construction Manual as referenced at http://www.ncdot.org/doh/operations/dp%5Fchief%5Feng/constructionunit/formsmanuals/construction/, which outlines the procedures for records and reports that must be adhered to in order to obtain uniformity of contract administration and documentation. This includes, but is not limited to, inspection reports, material test reports, materials certification, documentation of quantities, project diaries, and pay records. The Municipality, and/or its agent, shall perform the construction engineering, sampling and testing required during construction of the Project, in accordance with Departmental procedures, including the Department's Guide for Process Control and Acceptance Sampling and Testing. The Municipality shall document that said compliance was accomplished in accordance with State and Federal procedures, guidelines, standards and specifications.

RETAINAGE

The Municipality shall not retain any portion of a payment due the contractor.

SIGNAGE

The Municipality shall provide and maintain adequate signage and other warning devices for the protection of the public in accordance with the approved traffic control plans for the Project and the current edition of the Manual on Uniform Traffic Control Devices (MUTCD) for Streets and Highways, or any subsequent revision of the same, published by the Federal Highway Administration and effective at the time of award of the contract.

SITE LAYOUT

The Municipality shall be responsible for ensuring that all site layout, construction work, and Project documentation are in compliance with applicable city, state and federal permits, guidelines, and regulations, including American Association of State Highway and Transportation Officials (AASHTO) guidelines and Americans with Disabilities Act (ADA) Standards for Accessible Design (www.usdoj.gov/crt/ada/stdspdf.htm).

RIGHT TO INSPECT

The Department and representatives of the Federal Highway Administration shall have the right to inspect, sample or test, and approve or reject, any portion of the work being performed by the Municipality or the Municipality's contractor to ensure compliance with the provisions of this Agreement. Prior to any payment by the Department, any deficiencies inconsistent with approved plans and specifications found during an inspection must be corrected.

CONTRACTOR COMPLIANCE

The Municipality will be responsible for ensuring that the contractor complies with all of the terms of the contract and any instructions issued by the Department or FHWA as a result of any review or inspection made by said representatives.

CHANGE ORDERS

If any changes in the Project plans are necessary, the Department must approve such changes prior to the work being performed.

SHOP DRAWINGS

Shop Drawings shall be submitted in accordance with the approved plans and specifications and may require review by the Designer.

17. CLOSE-OUT

Upon completion of the Project, the Municipality shall be responsible for the following:

FINAL INSPECTION

The Municipality shall arrange for a final inspection by the Department. Any deficiencies determined during the final field inspection must be corrected prior to final payment being made by the Department to the Municipality. Additional inspection by other entities may be necessary in accordance with the Department's guidelines and procedures. The Municipality shall provide the Department with written evidence of approval of completed project prior to requesting final reimbursement.

FINAL PROJECT CERTIFICATION

The Municipality will provide a certification to the Department that all work performed for this Project is in accordance with all applicable standards, guidelines, and regulations.

18. MAINTENANCE

The Municipality, at no expense or liability to the Department, shall assume all maintenance responsibilities for the Circle Drive Shared-Use Path, or as required by an executed encroachment agreement.

19. REIMBURSEMENT

SCOPE OF REIMBURSEMENT

Activities eligible for funding reimbursement for this Project shall include:

- Design
- Environmental Documentation
- ROW Acquisition
- Utility Relocation
- Construction

REIMBURSEMENT GUIDANCE

The Municipality shall adhere to applicable administrative requirements of Title 2 Code of Federal Regulations, Part 200 (www.fhwa.dot.gov/legsregs/directives/fapgtoc.htm) "Uniform

Administrative Requirements, Cost Principles and Audit Requirements for Federal Awards." Reimbursement to the Municipality shall be subject to the policies and procedures contained in Title 23 Code of Federal Regulations, Part 140 and Part 172, which is being incorporated into this Agreement by reference at www.fhwa.dot.gov/legsregs/directives/fapgtoc.htm. Reimbursement to the Municipality shall be subject to the guidance contained in Title 2 Code of Federal Regulations, Part 170 (http://edocket.access.gpo.gov/2010/pdf/2010-22705.pdf) and Office of Management and Budget (OMB) "Federal Funding Accountability and Transparency Act" (FFATA). Said reimbursement shall also be subject to the Department being reimbursed by the Federal Highway Administration and subject to compliance by the Municipality with all applicable federal policy and procedures.

REIMBURSEMENT LIMITS

- **WORK PERFORMED BEFORE NOTIFICATION**

  Any costs incurred by the Municipality prior to written notification by the Department to proceed with the work shall not be eligible for reimbursement.

- **NO REIMBURSEMENT IN EXCESS OF APPROVED FUNDING**

  At no time shall the Department reimburse the Municipality costs that exceed the total funding per this Agreement and any Supplemental Agreements.

- **UNSUBSTANTIATED COSTS**

  The Municipality agrees that it shall bear all costs for which it is unable to substantiate actual costs or any costs that have been deemed unallowable by the Federal Highway Administration and/or the Department's Financial Management Division.

- **WORK PERFORMED BY NCDOT**

  All work performed by the Department on this Project, including, but not limited to, reviews, inspections, and Project oversight, shall reduce the maximum award amount of $1,713,287 available to the Municipality under this Agreement. The Department will bill the Municipality for the non-federal match of any costs that the Department incurs on the Project and for any costs that exceed the total available funding.

- **CONSTRUCTION ADMINISTRATION**

  Reimbursement for construction contract administration will be made as governed by Departmental policy that limits reimbursement for construction contract administration to

no more than fifteen (15%) percent of the actual construction contract of the Project. These costs will also include any cost overruns and charges to the Project by the Department during the Construction Phase.

- **CONSTRUCTION CONTRACT UNIT PRICES**

  Reimbursement for construction contract work will be made on the basis of contract unit prices in the construction contract and any approved change orders.

- **RIGHT OF WAY**

  Reimbursement will be limited to the value as approved by the Department. Eligible costs for reimbursement of Right of Way Acquisition include: realty appraisals, surveys, closing costs, and the agreed upon just compensation for the property, at the reimbursement rate as shown in the FUNDING TABLE.

- **FORCE ACCOUNT**

  Invoices for force account work shall show a summary of labor, labor additives, equipment, materials and other qualifying costs in conformance with the standards for allowable costs set forth in 2 CFR 200 "Uniform Administrative Requirements, Cost Principles, and Audit Requirements for Federal Awards." Reimbursement shall be based on actual eligible costs incurred with the exception of equipment owned by the Municipality or its Project partners. Reimbursement rates for equipment owned by the Municipality or its Project partners cannot exceed the Department's rates in effect for the time period in which the work is performed.

BILLING THE DEPARTMENT

- **PROCEDURE**

  The Municipality may bill the Department for eligible Project costs in accordance with the Department's guidelines and procedures. Proper supporting documentation shall accompany each invoice as may be required by the Department. By submittal of each invoice, the Municipality certifies that it has adhered to all applicable state and federal laws and regulations as set forth in this Agreement.

  Along with each invoice, the Municipality is responsible for submitting the FFATA Subrecipient Information Form, which is available at https://connect.ncdot.gov/municipalities/Funding/Pages/default.aspx.

- **INTERNAL APPROVALS**

  Reimbursement to the Municipality shall be made upon approval of the invoice by the Department's Financial Management Division.

- **TIMELY SUBMITTAL OF INVOICES**

  The Municipality may invoice the Department monthly for work accomplished, but no less than once every six (6) months to keep the Project funds active and available. If the Municipality is unable to invoice the Department, then they must provide an explanation. Failure to submit invoices or explanation may result in de-obligation of funds.

- **FINAL INVOICE**

  All invoices associated with the Project must be submitted within six (6) months of the completion of construction and acceptance of the Project to be eligible for reimbursement by the Department. Any invoices submitted after this time will not be eligible for reimbursement.

20. REPORTING REQUIREMENTS AND RECORDS RETENTION

PROJECT EVALUATION REPORTS

The Municipality is responsible for submitting quarterly Project evaluation reports, in accordance with the Department's guidelines and procedures, that detail the progress achieved to date for the Project.

PROJECT RECORDS

The Municipality and its agents shall maintain all books, documents, papers, accounting records, Project records and such other evidence as may be appropriate to substantiate costs incurred under this Agreement. Further, the Municipality shall make such materials available at its office and shall require its agent to make such materials available at its office at all reasonable times during the contract period, and for five (5) years from the date of payment of the final voucher by the Federal Highway Administration, for inspection and audit by the Department's Financial Management Section, the Federal Highway Administration, or any authorized representatives of the Federal Government.

21. OTHER PROVISIONS

REFERENCES

It will be the responsibility of the Municipality to follow the current and/or most recent edition of references, websites, specifications, standards, guidelines, recommendations, regulations and/or general statutes, as stated in this Agreement.

INDEMNIFICATION OF DEPARTMENT

The Municipality will indemnify and hold harmless the FHWA (if applicable), the Department and the State of North Carolina, their respective officers, directors, principals, employees, agents, successors, and assigns from and against any and all claims for damage and/or liability, including those that may be initiated by third parties, in connection with the Project activities performed pursuant to this Agreement including construction of the Project, except for those claims arising out of the errors, omissions, or negligence of the Department, its respective officers, directors, principals, employees, agents, successors, and assigns.

DEBARMENT POLICY

It is the policy of the Department not to enter into any agreement with parties that have been debarred by any government agency (Federal or State). By execution of this agreement, the Municipality certifies that neither it nor its agents or contractors are presently debarred, suspended, proposed for debarment, declared ineligible or voluntarily excluded from participation in this transaction by any Federal or State Agency or Department and that it will not enter into agreements with any entity that is debarred, suspended, proposed for debarment, declared ineligible or voluntarily excluded from participation in this transaction.

TITLE VI - CIVIL RIGHTS ACT OF 1964

The Municipality shall comply with Title VI of the Civil Rights Act of 1964, (Title 49 CFR, Subtitle A, Part 21). Title VI prohibits discrimination on the basis of race, color, national origin, disability, gender, and age in all programs or activities of any recipient of Federal assistance.

OTHER AGREEMENTS

The Municipality is solely responsible for all agreements, contracts, and work orders entered into or issued by the Municipality for this Project. The Department is not responsible for any

expenses or obligations incurred for the Project except those specifically eligible for the funds and obligations as approved by the Department under the terms of this Agreement.

AVAILABILITY OF FUNDS

All terms and conditions of this Agreement are dependent upon, and, subject to the allocation of funds for the purpose set forth in the Agreement and the Agreement shall automatically terminate if funds cease to be available.

IMPROPER USE OF FUNDS

Where either the Department or the FHWA determines that the funds paid to the Municipality for this Project are not used in accordance with the terms of this Agreement, the Department will bill the Municipality.

TERMINATION OF PROJECT

If the Municipality decides to terminate the Project without the concurrence of the Department, the Municipality shall reimburse the Department one hundred percent (100%) of all costs expended by the Department and associated with the Project.

AUDITS

In accordance with 2 CFR 200 “Uniform Administrative Requirements, Cost Principles, and Audit Requirements for Federal Awards,” Subpart F – Audit Requirements, and the Federal Single Audit Act Amendments of 1996, the Municipality shall arrange for an annual independent financial and compliance audit of its fiscal operations. The Municipality shall furnish the Department with a copy of the annual independent audit report within thirty (30) days of completion of the report, but not later than nine (9) months after the Municipality’s fiscal year ends.

REIMBURSEMENT BY MUNICIPALITY

For all monies due the Department as referenced in this Agreement, reimbursement shall be made by the Municipality to the Department within sixty (60) days of receiving an invoice. A late payment penalty and interest shall be charged on any unpaid balance due in accordance with NCGS 147-86.23.

USE OF POWELL BILL FUNDS

If the other party to this agreement is a Municipality and fails for any reason to reimburse the Department in accordance with the provisions for payment hereinabove provided, NCGS 136-41.3 authorizes the Department to withhold so much of the Municipality's share of funds allocated to Municipality by NCGS 136-41.1, until such time as the Department has received payment in full.

ENTIRE AGREEMENT

This Agreement contains the entire agreement between the parties and there are no understandings or agreements, verbal or otherwise, regarding this Agreement except as expressly set forth herein.

AUTHORIZATION TO EXECUTE

The parties hereby acknowledge that the individual executing the Agreement on their behalf is authorized to execute this Agreement on their behalf and to bind the respective entities to the terms contained herein and that he has read this Agreement, conferred with his attorney, and fully understands its contents.

COUNTERPARTS AND ELECTRONIC SIGNATURES

- This Agreement, and other documents to be delivered pursuant to this Agreement, may be executed in one or more counterparts, each of which will be deemed to be an original copy and all of which, when taken together, will be deemed to constitute one and the same agreement or document and will be effective when counterparts have been signed by each of the Parties. An image of a manual signature on this Agreement, or other documents to be delivered pursuant to this Agreement, will constitute an original signature for all purposes. The delivery of copies of this Agreement or other documents to be delivered pursuant to this Agreement, including executed signature pages where required, by electronic transmission will constitute effective delivery of this Agreement or such other document for all purposes.

- The Parties hereto further acknowledge and agree that this Agreement may be signed and/or transmitted by email or a PDF document or using electronic signature technology (e.g. DocuSign, Adobe Sign, or other electronic signature technology), and that such signed record shall be valid and as effective to bind the Party so signing as a paper copy bearing such Party's handwritten signature. By selecting "I Agree", "I Accept", or other

similar item, button, or icon via use of a keypad, mouse, or other device, as part of the electronic signature technology, the Parties consent to be legally bound by the terms and conditions of Agreement and that such act constitutes a signature as if actually signed in writing. The Parties also agree that no certification authority or other third-party verification is necessary to validate its electronic signature and that the lack of such certification or third-party verification will not in any way affect the enforceability of its electronic signature. The Parties acknowledge and agree that delivery of a copy of this Agreement or any other document contemplated hereby through the electronic signature technology, will have the same effect as physical delivery of the paper document bearing an original written signature.

GIFT BAN

By Executive Order 24, issued by Governor Perdue, and NCGS 133-32, it is unlawful for any vendor or contractor (i.e. architect, bidder, contractor, construction manager, design professional, engineer, landlord, offeror, seller, subcontractor, supplier, or vendor), to make gifts or to give favors to any State employee of the Governor's Cabinet Agencies (i.e. Administration, Commerce, Environmental Quality, Health and Human Services, Information Technology, Military and Veterans Affairs, Natural and Cultural Resources, Public Safety, Revenue, Transportation, and the Office of the Governor).

22. SUNSET PROVISION

All terms and conditions of this Agreement are dependent upon, and subject to, the allocation of funds for the purpose set forth in the Agreement and the Agreement shall automatically terminate if funds cease to be available.

IT IS UNDERSTOOD AND AGREED that the approval of the Project by the Department is subject to the conditions of this Agreement, and that no expenditures of funds on the part of the Department will be made until the terms of this Agreement have been complied with on the part of the Municipality.

IN WITNESS WHEREOF, this Agreement has been executed, in duplicate, the day and year heretofore set out, on the part of the Department and the Municipality by authority duly given.

L.S. ATTEST:

BY: _____

TITLE: _____

CITY OF MONROE

BY: _____

TITLE: _____

DATE: _____

NCGS 133-32 and Executive Order 24 prohibit the offer to, or acceptance by, any State Employee of any gift from anyone with a contract with the State, or from any person seeking to do business with the State. By execution of any response in this procurement, you attest, for your entire organization and its employees or agents, that you are not aware that any such gift has been offered, accepted, or promised by any employees of your organization.

This Agreement has been pre-audited in the manner required by the Local Government Budget and Fiscal Control Act.

(SEAL)

_____
(FINANCE OFFICER)

Federal Tax Identification Number

_____

City of Monroe

Remittance Address:

_____

_____

DEPARTMENT OF TRANSPORTATION

BY: _____
(CHIEF ENGINEER)

DATE: _____

APPROVED BY BOARD OF TRANSPORTATION ITEM O: _____(Date)

STAFF REPORT

TO: Public Safety Committee

VIA: Mark Watson, City Manager

DATE: August 3, 2026

FROM: Sarah McAllister, P.E., Director of Engineering

PREPARED BY: Sarah McAllister, P.E., Director of Engineering

SUBJECT: Proposed Right-of-Way Abandonment – 4 foot-wide-walkway between Elizabeth Avenue and Normand Street

---

SUMMARY STATEMENT

The Public Safety Committee is requested to consider a request to abandon approximately 203 linear feet of four-foot-wide walkway right-of-way between Elizabeth Avenue and Normand Street.

REVIEW

City Council held a public hearing on this matter on April 28, 2026. They asked for more information on the cost of repairing the pedestrian walkway. The City obtained an easement in 1972 for the purposes of constructing and/or widening a four-foot-wide walkway on parcel 09192075 near East Elementary School between Elizabeth Avenue and Normand Street. The walkway is four-feet wide with a chain link fence on both sides and has a make shift bridge over a drainage ditch consisting of two wooden power poles laid across the ditch with wooden boards attached to the top. The Street Division had been maintaining the vegetation along the walkway and fences until they noticed damage to portions of the concrete walkway and bridge. They then placed sidewalk closed signs at each end in March of 2025. Chain link fence was also installed across each end. One person showed up at the public hearing stating that he used the walkway to take his granddaughter to school.

A copy of the easement obtained on August 30, 1792 and a map of the area are attached for reference.

Stormwater staff have evaluated the costs to replace the existing bridge and walkway. The ditch located at the back of the property drains over 95 acres. Because of the large drainage area, piping the walkway over the ditch is not feasible due to the pipe sizes that would be required. Therefore, a small bridge would be needed. Total estimated costs to replace the walkway are approximately $300,000. This includes the bridge installation and replacing the sidewalk along with an engineering design, estimate, and construction administrative services. The bridge alone is estimated at $115,000.

Resolution R-2026-21 abandoning the four-foot-wide walkway starting at the front property line of parcel 09192075 and extending north to the rear property line of parcel 09192075 is attached for consideration. A certified letter was mailed to Ryan Cureton, the speaker at the public hearing notifying him that the public hearing would be continued on August 11, 2026,

---

RECOMMENDATION

The Public Safety Committee is recommended to approve Resolution R-2026-21 closing and abandoning the four-foot-wide walkway right-of-way starting at the front property line of parcel 09192075 and extending north to the rear property line of parcel 09192075 for a distance of approximately 203 feet. The Public Hearing will be continued at the August 11th meeting.

Attachments:
Walkway Right-of-Way Easement dated August 30, 1972
Map
Resolution (R-2026-21)

city of monroe

BOOK 255 PAGE 25

NORTH CAROLINA

UNION COUNTY

~~STREET~~ Walkway RIGHT-OF-WAY

State Excise Tax 50¢

KNOW ALL MEN BY THESE PRESENTS, That I (We) Jerry T. Murray and _____ of Monroe, N. C., Grantor(s), in consideration of One ($1.00) Dollar to me (us) paid by the City of Monroe and in further consideration of benefits accruing to myself (ourselves) my (our) heirs, representatives and successors in title, receipt whereof is hereby acknowledged, to hereby grant and convey to the City of Monroe, North Carolina, a 4 foot ~~street~~ walkway right-of-way easement for the purpose of constructing and/or widening a 4 foot walkway _____, located in the City of Monroe, said point being located on my (our) property beginning at: the common corner of lots #11 & #12, on Elizabeth Avenue, and running thence with the lot line of #11 & #12 North 10 deg. 04 min. and 20 sec. West 201.12 feet to an iron stake a common corner of lots #11 & #12; thence with the lot line of #11 North 60 deg. 36 min and 30 sec. East 4.24 feet to a stake; thence South 10 deg. 04 min. 20 sec. East 202.52 feet to a stake located on the North side of Elizabeth Avenue; thence with Elizabeth Avenue South 79 deg, 55 min 40 sec. west 4 feet to the beginning

Said easement to also include the installation, operation and maintenance of all utilities (water, gas, sewer and electricity) above or below ground.

IN TESTIMONY WHEREOF, the party (ies) of the first part, grantor (s) have (has) hereunto set his (their) hand. (s) and seal (s) on the 30 day of August, 1972.

Witness: L. C. Jone

Jerry T. Murray (Seal)

_____ (Seal)

_____ (Seal)

North Carolina-Union County

I, Claudette H. Smith, a Notary Public in and for said County and State, do hereby certify that Jerry T. Murray personally appeared before me this day (and acknowledged the due execution of the foregoing instrument) or (and being duly sworn stated that in his presence _____ signed the foregoing instrument) for the purpose and intents therein expressed.

Witness my hand and Notarial Seal, this the 30 day of August, 1972.

My Commission Expires: Dec. 1, 1975

Claudette H. Smith (Seal)

North Carolina - Union County

The foregoing certificate of Claudette H. Smith Notary Public of Union County is ~~adjudged~~ certified to be correct. ~~Let the foregoing instrument with this certificate be registered.~~ Filed for registration

This 28 day of February, 1973, at 1:00 o'clock P.M.

Mary B. Carriker ~~(Seal)~~
Register of Deeds

STATE OF NORTH CAROLINA
Real Estate Excise Tax
FEB 28 '73
00.50
PB 10711
UNION COUNTY
12214

Book 255 - Page 25

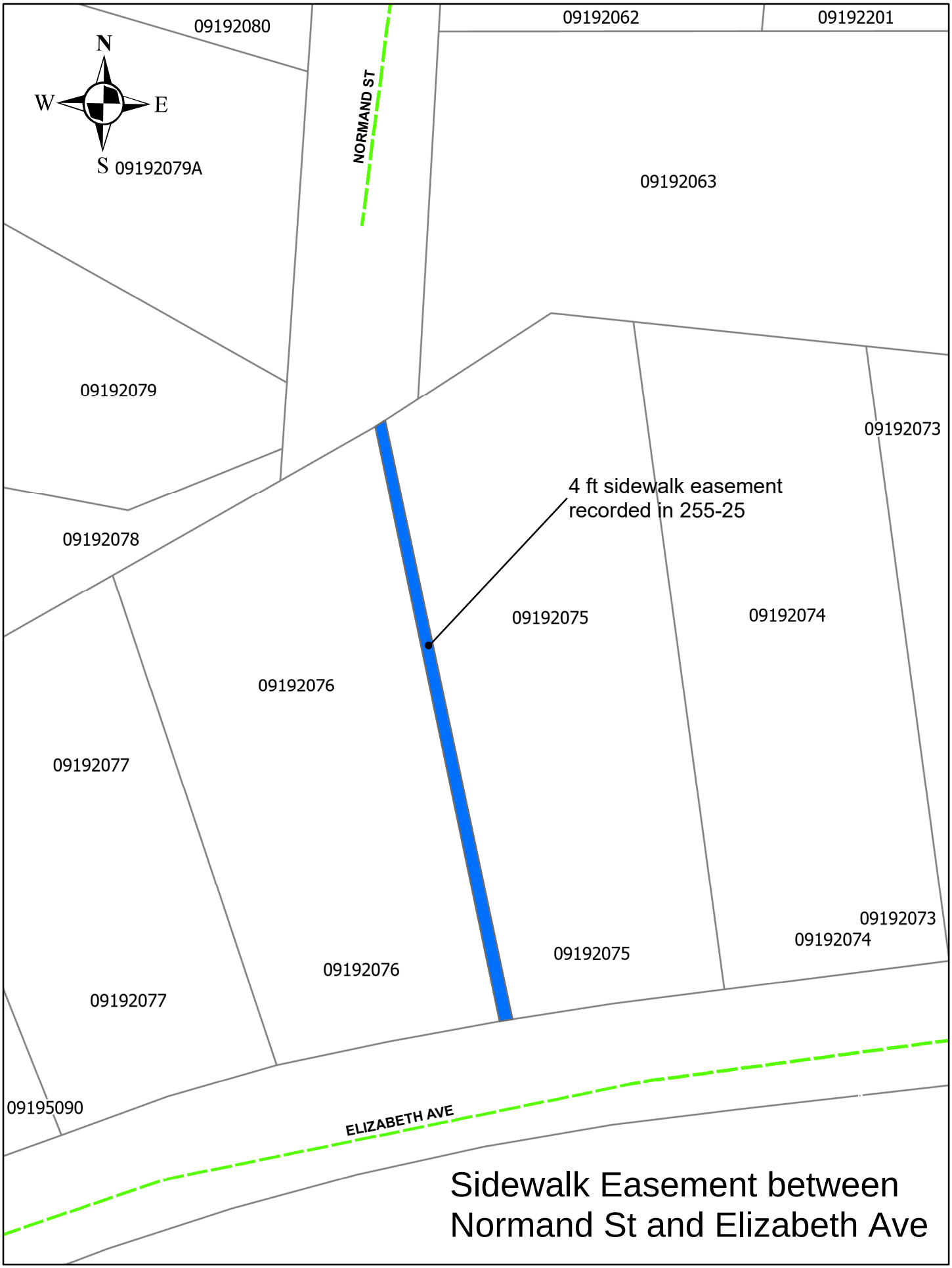
09192080
09192062
09192201
N
W
E
S
09192079A
NORMAND ST
09192063
09192079
09192073
4 ft sidewalk easement
recorded in 255-25
09192078
09192075
09192074
09192076
09192077
09192073
09192074
09192075
09192076
09192077
09195090
ELIZABETH AVE
Sidewalk Easement between
Normand St and Elizabeth Ave

RESOLUTION TO ABANDON
A FOUR-FOOT-WIDE WALKWAY RIGHT-OF-WAY
EASEMENT FROM THE FRONT PROPERTY LINE OF PARCEL 09192075 TO
THE REAR PROPERTY LINE OF PARCEL 09192075
R-2026-21

WHEREAS, on the 10th day of March, 2026, the City Council of the City of Monroe directed the City Clerk to publish the Resolution of Intent of the City Council to consider abandoning the hereinafter described a four-foot-wide walkway starting at the front property line of parcel 09192075 and extending north to the rear property line of parcel 09192075 owned by Veronica Torrez Rodriguez and Ximena Rodriguez-Torrez (deed recorded in Plat Book 8963, Page 333), about 203 linear feet in length in a newspaper authorized to publish legal ads in the City of Monroe as required by statute, such resolution advising to the public that a public hearing would be conducted on the question at the City of Monroe Council Meeting on April 28, 2026 at 6:00 pm; and,

WHEREAS, the City Council on the 10th day of March, 2026, ordered the City Clerk to notify all persons owning property adjoining the four-foot-wide walkway, beginning at the front property line of parcel 09192075 and extending north to the rear property line of parcel 09192075 for a distance of 203 +/- feet as shown on the county tax records, by registered or certified mail, enclosing with such notification a copy of the Resolution of Intent; and,

WHEREAS, the City Clerk has advised the City Council that she caused the Resolution of Intent to be published once a week for four consecutive weeks prior to the hearing and that she sent a letter to each adjoining property owner advising them of the day, time, and place of the meeting, enclosing a copy of the Resolution of Intent, and advising said abutting property owners that the question as to abandoning the four-foot-wide walkway right-of-way starting at the front property line of parcel 09192075 and extending north to the rear property line of parcel 09192075 for a distance of 203 +/- feet, as shown on the county tax records would be acted upon. Said letters have been sent by registered or certified mail; and,

WHEREAS, the City Clerk has advised the City Council that adequate notices were posted in at least two places on the applicable street as required by G.S. 160A-299; and,

WHEREAS, consideration of the matter was given in the public hearing held on the 28th day of April, 2026, Engineering Staff was asked to bring back information on the costs of replacement of the pedestrian walkway, and the public hearing was extended to return to City Council on August 11, 2026; and,

WHEREAS, a full and complete consideration of the matter was given in the public hearing held on the 11th day of August after having granted a full and complete opportunity for all interested persons to appear and register any objections that they might have; and

WHEREAS, it now appears to the satisfaction of the City Council that the abandoning of said walkway right-of-way is not contrary to the public interest, and that no

individual owning property, either adjoining the walkway or in the vicinity of said walkway or in the subdivision in which said walkway is located, will, as a result of said abandoning, be thereby deprived of a reasonable means of ingress and egress to his property.

NOW, THEREFORE, the four-foot-wide walkway right-of-way beginning at the front property line of parcel 09192075 and extending north to the rear property line of parcel 09182075 owned by Veronica Torrez Rodriguez and Ximena Rodriguez-Torrez (deed recorded in Plat Book 8963, Page 333) for a distance of 203 +/- feet is hereby ordered abandoned, pursuant to NCGS 160A-299, and all right, title, and interest that may be vested in the public to said area for walkway purposes is hereby terminated with title vesting as provided in 160A-299©.

The City Clerk is hereby ordered and directed to file in the Office of the Register of Deeds of Union County a certified copy of the resolution and order.

Upon motion duly made by _____, duly seconded by_____, the above Resolution was duly adopted by the City Council at a meeting held on August 11, 2026 in the City of Monroe Council Chambers.

Upon call for a vote, the following Council Members voted in the affirmative:

And the following Council Members voted in the negative:

This the 11th day of August, 2026.

_____
Robert A. Burns, Mayor

ATTEST:

_____
Bridgette H. Robinson, City Clerk

North Carolina, Union County

I, Sherry K. Hicks, Notary Public, in and for said County and State, do hereby certify that Bridgette H. Robinson personally appeared before me this day and acknowledged that she is the City Clerk of the City of Monroe, a municipal corporation of said State, and that by authority duly given and as an act of said City, the foregoing instrument was signed in the name of the City and in her presence by its Mayor, sealed with the corporate seal of said City, and attested by herself as its City Clerk.

Witness my hand and notarial seal, this _____ day of _____, 2026.

_____

(Seal)

Notary Public

My Commission Expires: January 4, 2031

STAFF REPORT

TO:	Public Safety Committee
VIA:	Mark Watson, City Manager
DATE:	August 3, 2026
FROM:	David Dotson – Chairman, Public Safety Committee
PREPARED BY:	Alice Withers, Administrative Assistant II
SUBJECT:	Flashing Red Frames Added to Stop Signs at Intersection of Virginia Ave and S. Westover Drive

SUMMARY STATEMENT

At the request of Chairman Dotson, this topic is for discussion purposes only.

REVIEW

For discussion purposes only.

RECOMMENDATION

For discussion purposes only.

STAFF REPORT

TO: Public Safety Committee

VIA: Mark Watson, City Manager

DATE: August 3, 2026

FROM: David Dotson – Chairman, Public Safety Committee

PREPARED BY: Alice Withers, Administrative Assistant II

SUBJECT: Speed Cushions on Arnold Drive

SUMMARY STATEMENT

At the request of Chairman Dotson, this topic is for discussion purposes only.

REVIEW

For discussion purposes only.

RECOMMENDATION

For discussion purposes only.

STAFF REPORT

TO: Public Safety Committee

VIA: Mark Watson, City Manager

DATE: August 3, 2026

FROM: David Dotson – Chairman, Public Safety Committee

PREPARED BY: Alice Withers, Administrative Assistant II

SUBJECT: Review Curfew Ordinance

SUMMARY STATEMENT

At the request of Chairman Dotson, this topic is for discussion purposes only.

REVIEW

For discussion purposes only.

RECOMMENDATION

For discussion purposes only.

STAFF REPORT

TO: Public Safety Committee

VIA: Mark Watson, City Manager

DATE: August 3, 2026

FROM: Sarah McAllister, P.E., Engineering Director

PREPARED BY: Sarah McAllister, P.E., Engineering Director

SUBJECT: Request to Award the Purchase of a Dump Truck

SUMMARY STATEMENT

The Public Safety Committee is requested to consider information related to the purchase of a dump truck for the Engineering Department – Street Division.

REVIEW

The Engineering Department – Street Division has the replacement of a 2005 Freightliner dump truck included in the Powell Bill budget for FY 27. The truck was budgeted at $270,000. A 2027 Freightliner 114SD with a Cummins X12 455V Engine, Allison 4500 RDS Transmission, and 16' Dump Body has been identified that meets all the needs and specifications for the Street Division through National Auto Fleet Group per Sourcewell Contract 032824-NAF. Sourcewell is a purchasing cooperative that competitively bids equipment that meets the statutory requirements. The program is open to use for all city and county agencies.

National Auto Fleet Group (the vendor) and Sourcewell have entered into an agreement for the procurement of the dump truck. A quote was received from National Auto Fleet Group on May 28, 2026 in the amount of $269,395.00 for a 2027 Freightliner that meets the needs of the Street Division. A letter of intent to purchase was sent on May 29, 2026 allowing the City to lock in the price to avoid a $15,000 price increase due to changes in regulations. Funds are available in the FY 27 Powell Bill Capitalized Motor Vehicles account.

RECOMMENDATION

The Public Safety Committee is requested to approve the following:

1) Award of the 2027 Freightliner in the amount of $269,395.00 to National Auto Fleet Group through the Sourcewell Contract 032824-NAF.
2) Authorization of the City Manager to execute any and all necessary documents.

If the Public Safety Committee is in agreement, this item will be placed on the consent agenda for Council approval on August 11, 2026.

Attachments:
National Auto Fleet Group Quote ID#3264HD (R1)
Letter of Intent to Purchase

National Auto Fleet Group

A Division of Chevrolet of Watsonville

490 Auto Center Drive, Watsonville, CA 95076

(855) 289-6572 • (831) 480-8497 Fax

Fleet@NationalAutoFleetGroup.com

5/28/2026

Quote ID#3264HD (R1)

Ms. Monica Bulos

City of Monroe
2201 Walkup Avenue
Monroe, NC 28110

Dear Monica Bulos,

National Auto Fleet Group is pleased to quote the following sourced item(s) for your consideration. One (1) New/Unused (**2027 Freightliner 114SD Plus, Cummins X12 455V Engine, Allison 4500 RDS Transmission with 16' Dump Body via Lee Transport**) and provided by Mr. Dan Walters with Velocity Truck Center, each for:

	List Price	Contract Price	Adj. Discount	Savings
Chassis and Option	$ 205,371.00	$ 187,630.00	8.638%	$ 17,741.00
Lee Transport Quote		$ 71,765.00		
Tax (0.00%)		$ 0.00		
Total		$ 269,395.00		

Payment in full before title is released.
CHASSIS IS TO BE ORDERED FOR A NON-CARB STATE (CALIFORNIA AIR RESOURCES BOARD). EPA EMISSIONS LABEL TO BE PLACED ON DRIVERS SIDE DOOR.
ORDER IS NON-CANCELABLE.

This sourced item(s) is available under the Sourcewell (Formerly Known as NJPA) Contract 032824-NAF. Please reference this Bid Number on all Purchase Orders.

Thank you in advance for your consideration. Should you have any questions, please do not hesitate to call.

Sincerely,

Ben Rodriguez
HD Contract Manager
BEN@NationalAutoFleetGroup.com
Office (855) 289-6572
Fax (831) 480-8497

Custom Quotation For:

CITY OF MONROE, NC

LEE TRANSPORT EQUIPMENT INC.

1300 BLUFF ROAD COLUMBIA, SC 29201

PHONE# 877-799-7860 WEBSITE: WWW.LEETRANSPORT.NET

Quote #	**JG-08282025-A**
Date:	8/28/2025
Phone #	

	PRICING:
SC STATE CONTRACT FOR DUMP BODIES 4400035733	$ -
FURNISH AND INSTALL GODWIN MODEL 16FT 500T DUMP BODY WITH 42" SIDES	$ -
COMPLETE 3/16" HARDOX STEEL BODY WITH 1 HORIZONTAL RIB ON EACH SIDE	$ -
AIR OPERATED 3-PANEL BARN DOOR STYLE STRAIGHT TAILGATE	$ -
3 EZ STEP LADDER INSTALLED ON CURBSIDE	$ -
36" CAB SHIELD INSTALLED	$ -
12" ASPHALT SPREADER APRON	$ -
AMBER STROBE LIGHT PACKAGE INSTALLED (CAB SHIELD AND REAR OF BODY)	$ -
8" OAK SIDE BOARDS INSTALLED ON TOP OF SIDES	$ -
MUNCIE HOT SHIFT PTO	$ -
HYVA HOIST SYSTEM WITH ANTI-BURST PROTECTION AND HOIST STABILIZER	$ -
ELECTRIC/HYDRAULIC POWER SYSTEM INSTALLED TO OPERATE SNOW PLOW	$ -
POWDERCOAT BLACK FINISH WITH ZINC PRIMER TO 5,000 HOUR SALT SPRAY TEST	$ -
GOOD ROADS MODEL 120MX36 SNOW PLOW WITH QUICK HITCH GN200Q/QLOOP	$ -
FRONT BUMPER REINFORCEMENT FOR SNOW PLOW	$ -
10'X36" MOLD BOARD PAINTED ORANGE WITH RUBBER DEFLECTOR AND PLOW MARKERS	$ -
SNOW PLOW LIGHTS INSTALLED	$ -
SCREW ADJUSTABLE SKID SHOES AND HARDOX AR450 CUTTING BLADE	$ -
(PLOW IS ELECTRIC OVER HYDRAULIC DRIVEN - POWER UP/DOWN/LEFT/RIGHT)	$ -
	$ -
PRICE COMPLETE - INSTALLED AT COLUMBIA, SC AND INSTALLED TO END USER MONROE, NC	$ 71,765.00
	$ -
	$ -
	$ -
	$ -
Quoted prices good for 30 days.	$ -
	$ -
	$ -
	$ -

Customers chassis covered with primary coverage insurance while in the care and the custody of L.T.E. Product Liability insurance carried.

Net Price:	$ 71,765.00
Discount:	
State Sales Tax:	
Total Price:	$ 71,765.00

Chassis: **CA:** **Paint:**

Other Data:

Tax Exempt No **Terms:** **Delivery Date:**

Accepted By **Date:**

Lee Transport Equipment, Inc.

By: **JILL GLOVER**

Prepared For :
MONICA BULOS
MONROE CITY OF
2201 WALK UP AVENUE
MONROE, NC 28110
UNITED STATES
Phone :704-282-4603

Prepared by:
Dan Walters
VELOCITY TRUCK CENTERS
6006 MIRAMAR RD.
SAN DIEGO, CA 92121
Phone :619-564-3710

A proposal for
MONROE CITY OF

Prepared by
VELOCITY TRUCK CENTERS

Dan Walters

August 28, 2025

Freightliner 114SD Plus

Components shown may not reflect all spec'd options and are not to scale

Prepared For :
MONICA BULOS
MONROE CITY OF
2201 WALK UP AVENUE
MONROE, NC 28110
UNITED STATES
Phone :704-282-4603

Prepared by:
Dan Walters
VELOCITY TRUCK CENTERS
6006 MIRAMAR RD.
SAN DIEGO, CA 92121
Phone :619-564-3710

SPECIFICATION PROPOSAL

Data Code	Description	Weight Front	Weight Rear
Price Level			
PRL-29D	SD PRL-29D (EFF:MY26 ORDERS)		
Data Version			
DRL-002	SPECPRO21 DATA RELEASE VER 002		
Vehicle Configuration			
001-177	114SD PLUS CONVENTIONAL CHASSIS	7,934	6,476
004-226	2026 MODEL YEAR SPECIFIED		
002-004	SET BACK AXLE - TRUCK	480	-480
019-006	TRAILER TOWING PROVISION AT END OF FRAME WITH SAE J560	10	10
003-001	LH PRIMARY STEERING LOCATION		
General Service			
AA1-003	TRUCK/TRAILER CONFIGURATION		
AA6-002	DOMICILED, USA (EXCLUDING CALIFORNIA AND CARB OPT-IN STATES)		
99D-027	EPA CLEAN IDLE LABEL FOR INITIAL REGISTRATION IN EPA OR ACT STATES - (INCLUDES 6X4 INCH LABEL ON LOWER FORWARD OF DRIVER DOOR)		
A85-011	CONSTRUCTION SERVICE		
A84-1GM	GOVERNMENT BUSINESS SEGMENT		
AA4-010	DIRT/SAND/ROCK COMMODITY		
AA5-002	TERRAIN/DUTY: 100% (ALL) OF THE TIME, IN TRANSIT, IS SPENT ON PAVED ROADS		
AB1-008	MAXIMUM 8% EXPECTED GRADE		
AB5-001	SMOOTH CONCRETE OR ASPHALT PAVEMENT - MOST SEVERE IN-TRANSIT (BETWEEN SITES) ROAD SURFACE		
995-1AD	FREIGHTLINER LEVEL I WARRANTY		
A66-99D	EXPECTED FRONT AXLE(S) LOAD 18000.0 lbs		
A68-99D	EXPECTED REAR DRIVE AXLE(S) LOAD 40000.0 lbs		

Prepared For :
MONICA BULOS
MONROE CITY OF
2201 WALK UP AVENUE
MONROE, NC 28110
UNITED STATES
Phone :704-282-4603

Prepared by:
Dan Walters
VELOCITY TRUCK CENTERS
6006 MIRAMAR RD.
SAN DIEGO, CA 92121
Phone :619-564-3710

Data Code	Description	Weight Front	Weight Rear
A63-99D	EXPECTED GROSS VEHICLE WEIGHT CAPACITY 58000.0 lbs		
A70-99D	EXPECTED GROSS COMBINATION WEIGHT 80000.0 lbs		
Truck Service			
AA3-018	FRONT PLOW/END DUMP BODY		
AF3-1V4	GODWIN MANUFACTURING COMPANY		
Tractor Service			
AA2-005	FLATBED TRAILER		
AH6-001	SINGLE (1) TRAILER		
Engine			
101-26J	CUM X12 455V HP @ 1900 RPM, 1550 LB-FT @ 1000 RPM, 2000 GOV RPM, VOC	-390	-45
Electronic Parameters			
79A-068	68 MPH ROAD SPEED LIMIT		
79B-000	CRUISE CONTROL SPEED LIMIT SAME AS ROAD SPEED LIMIT		
79K-014	PTO MODE ENGINE RPM LIMIT - 1800 RPM		
79M-001	PTO ENGINE SPEED CONTROL DEACTIVATED BY SERVICE BRAKE LIGHTLY APPLIED (STATIONARY APPLICATIONS)		
79P-009	PTO RPM WITH CRUISE SET SWITCH - 1200 RPM		
79Q-003	PTO RPM WITH CRUISE RESUME SWITCH - 800 RPM		
79U-004	PTO GOVERNOR RAMP RATE - 100 RPM PER SECOND		
79W-025	CRUISE CONTROL BUTTON PTO CONTROL AND ONE REMOTE PTO SPEED		
79X-010	PTO SPEED 1 SETTING - 1300 RPM		
80P-998	NO FLEET SPEC FOR PARAMETERIZATION		
80G-003	PTO MINIMUM RPM - 750		
80J-002	REGEN INHIBIT SPEED THRESHOLD - 5 MPH		
80S-021	PTO 1, WITH SWITCH, TEM SUPPLIED REQUEST AND INTERLOCKS, WITH PTO CONNECTIONS, ENGAGE		

Data Code	Description	Weight Front	Weight Rear
	BEFORE DRIVING INTERLOCKS		

Engine Equipment

99C-024	EPA 2010/GHG 2024 CONFIGURATION		
13E-001	STANDARD OIL PAN		
105-001	ENGINE MOUNTED OIL CHECK AND FILL		
014-108	SIDE OF HOOD AIR INTAKE WITH FIREWALL MOUNTED DONALDSON AIR CLEANER WITH SAFETY ELEMENT AND INSIDE/OUTSIDE AIR WITH SNOW DOOR	10	
124-1D7	DR 12V 160 AMP 28-SI QUADRAMOUNT PAD ALTERNATOR WITH REMOTE BATTERY VOLT SENSE		
292-236	(3) DTNA GENUINE, FLOODED STARTING, MIN 3000CCA, 555RC, THREADED STUD BATTERIES		
290-1CD	BATTERY BOX WITH ALUMINUM COVER MOUNTED SHORT SIDE TO RAIL	15	
281-001	STANDARD BATTERY JUMPERS		
282-003	SINGLE BATTERY BOX FRAME MOUNTED LH SIDE BACK OF CAB		
291-017	WIRE GROUND RETURN FOR BATTERY CABLES WITH ADDITIONAL FRAME GROUND RETURN		
289-001	NON-POLISHED BATTERY BOX COVER		
293-058	NON-ESSENTIAL POSITIVE LOAD DISCONNECT, IN CAB CONTROL SWITCH MOUNTED OUTBOARD OF DRIVER SEAT	2	
295-029	POSITIVE AND NEGATIVE POSTS FOR JUMPSTART LOCATED ON FRAME NEXT TO STARTER	2	
306-015	PROGRESSIVE LOW VOLTAGE DISCONNECT AT 12.3 VOLTS FOR DESIGNATED CIRCUITS	2	
107-048	CUMMINS NATURALLY ASPIRATED 25.9 CFM AIR COMPRESSOR WITH INTERNAL SAFETY VALVE		
152-041	ELECTRONIC ENGINE INTEGRAL SHUTDOWN PROTECTION SYSTEM		
128-132	CUMMINS INTEBRAKE WITH HIGH MED LOW BRAKE WITH BRAKE LAMPS		
016-1C2	RH OUTBOARD UNDER STEP MOUNTED HORIZONTAL AFTERTREATMENT SYSTEM ASSEMBLY WITH RH B-PILLAR MOUNTED VERTICAL TAILPIPE	30	25
28F-014	ENGINE AFTERTREATMENT DEVICE, AUTOMATIC OVER THE ROAD REGENERATION AND VIRTUAL REGENERATION REQUEST SWITCH IN CLUSTER		

Data Code	Description	Weight Front	Weight Rear
239-032	11 FOOT 00 INCH (132 INCH+0/-5.9 INCH) EXHAUST SYSTEM HEIGHT		
237-1CR	RH CURVED VERTICAL TAILPIPE B-PILLAR MOUNTED ROUTED FROM STEP		
23U-002	13 GALLON DIESEL EXHAUST FLUID TANK		
30N-003	100 PERCENT DIESEL EXHAUST FLUID FILL		
23Y-001	STANDARD DIESEL EXHAUST FLUID PUMP MOUNTING		
23Z-002	NON-POLISHED ALUMINUM DIAMOND PLATE DIESEL EXHAUST FLUID TANK COVER	15	5
43X-002	LH MEDIUM DUTY STANDARD DIESEL EXHAUST FLUID TANK LOCATION		
43Y-001	STANDARD DIESEL EXHAUST FLUID TANK CAP		
242-011	ALUMINUM AFTERTREATMENT DEVICE/MUFFLER/TAILPIPE SHIELD(S)		
273-058	AIR POWERED ON/OFF ENGINE FAN CLUTCH		
276-002	AUTOMATIC FAN CONTROL WITH DASH SWITCH AND INDICATOR LIGHT, NON ENGINE MOUNTED		
110-003	CUMMINS SPIN ON FUEL FILTER		
118-008	COMBINATION FULL FLOW/BYPASS OIL FILTER		
120-998	NO COOLANT FILTER	-10	
266-057	1500 SQUARE INCH ALUMINUM RADIATOR		
103-039	ANTIFREEZE TO -34F, OAT (NITRITE AND SILICATE FREE) EXTENDED LIFE COOLANT		
171-007	GATES BLUE STRIPE COOLANT HOSES OR EQUIVALENT		
172-001	CONSTANT TENSION HOSE CLAMPS FOR COOLANT HOSES		
270-016	RADIATOR DRAIN VALVE		
138-005	PHILLIPS-TEMRO 1500 WATT/115 VOLT BLOCK HEATER	4	
140-053	BLACK PLASTIC ENGINE HEATER RECEPTACLE MOUNTED UNDER LH DOOR		
155-055	DELCO 12V 39MT HD/OCP STARTER WITH THERMAL PROTECTION AND INTEGRATED MAGNETIC SWITCH	-45	

Transmission

Data Code	Description	Weight Front	Weight Rear
342-1M3	ALLISON 4500 RDS AUTOMATIC TRANSMISSION WITH PTO PROVISION	260	100

Transmission Equipment

343-339	ALLISON VOCATIONAL PACKAGE 223 - AVAILABLE ON 3000/4000 PRODUCT FAMILIES WITH VOCATIONAL MODELS RDS, HS, MH AND TRV
84B-012	ALLISON VOCATIONAL RATING FOR ON/OFF HIGHWAY APPLICATIONS AVAILABLE WITH ALL PRODUCT FAMILIES
84C-023	PRIMARY MODE GEARS, LOWEST GEAR 1, START GEAR 1, HIGHEST GEAR 6, AVAILABLE FOR 3000/4000 PRODUCT FAMILIES ONLY
84D-023	SECONDARY MODE GEARS, LOWEST GEAR 1, START GEAR 1, HIGHEST GEAR 6, AVAILABLE FOR 3000/4000 PRODUCT FAMILIES ONLY
84E-000	PRIMARY SHIFT SCHEDULE RECOMMENDED BY DTNA AND ALLISON, THIS DEFINED BY ENGINE AND VOCATIONAL USAGE
84F-000	SECONDARY SHIFT SCHEDULE RECOMMENDED BY DTNA AND ALLISON, THIS DEFINED BY ENGINE AND VOCATIONAL USAGE
84G-000	PRIMARY SHIFT SPEED RECOMMENDED BY DTNA AND ALLISON, THIS DEFINED BY ENGINE AND VOCATIONAL USAGE
84H-000	SECONDARY SHIFT SPEED RECOMMENDED BY DTNA AND ALLISON, THIS DEFINED BY ENGINE AND VOCATIONAL USAGE
84J-000	ENGINE BRAKE RANGE PRESELECT RECOMMENDED BY DTNA AND ALLISON, THIS DEFINED BY ENGINE AND VOCATIONAL USAGE
84K-002	2ND GEAR ENGINE BRAKE ALTERNATE PRESELECT WITH MODERATE DOWNSHIFT STRATEGY
84N-009	FUEL SENSE 2.0 MAX - DYNACTIVE: BALANCED (W/DSS), NEUTRAL AT STOP: ACTIVE, ACCELERATION RATE MANAGEMENT: ACTIVE
84U-000	DRIVER SWITCH INPUT - DEFAULT - NO SWITCHES
84V-001	DIRECTION CHANGE ENABLED WITH MULTIPLEXED SERVICE BRAKES - ALLISON 5TH GEN TRANSMISSIONS
353-073	QUICKFIT BODY LIGHTING CONNECTOR UNDER CAB, WITH CAP
34C-011	ELECTRONIC TRANSMISSION WIRING TO CUSTOMER INTERFACE CONNECTOR
362-2JU	CUSTOMER INSTALLED CHELSEA 871 SERIES PTO
363-001	PTO MOUNTING, LH SIDE OF MAIN TRANSMISSION

Data Code	Description	Weight Front	Weight Rear
	ALLISON		
341-018	MAGNETIC PLUGS, ENGINE DRAIN, TRANSMISSION DRAIN, AXLE(S) FILL AND DRAIN		
345-003	PUSH BUTTON ELECTRONIC SHIFT CONTROL, DASH MOUNTED		
97G-004	TRANSMISSION PROGNOSTICS - ENABLED 2013		
370-011	WATER TO OIL TRANSMISSION COOLER, FRAME MOUNTED		
346-003	TRANSMISSION OIL CHECK AND FILL WITH ELECTRONIC OIL LEVEL CHECK		
35T-001	SYNTHETIC TRANSMISSION FLUID (TES-295 COMPLIANT)		
Front Axle and Equipment			
400-1BA	DETROIT DA-F-18.0-5 18,000# FL1 71.0 KPI/3.74 DROP SINGLE FRONT AXLE	210	
402-1B1	MERITOR EX-L AIR DISC FRONT BRAKES		
403-002	NON-ASBESTOS FRONT BRAKE LINING		
419-004	FRONT DISC BRAKE ROTORS		
409-006	FRONT OIL SEALS		
408-001	VENTED FRONT HUB CAPS WITH WINDOW, CENTER AND SIDE PLUGS - OIL		
416-022	STANDARD SPINDLE NUTS FOR ALL AXLES		
405-030	FRONT AIR DISC BRAKE INTERNAL ADJUSTERS		
406-001	STANDARD KING PIN BUSHINGS		
536-055	TRW THP-60 POWER STEERING WITH RCH45 AUXILIARY GEAR	130	
539-003	POWER STEERING PUMP		
534-003	4 QUART POWER STEERING RESERVOIR		
533-001	OIL/AIR POWER STEERING COOLER		
40T-001	MINERAL SAE 80/90 FRONT AXLE LUBE		
Front Suspension			

Prepared For :
MONICA BULOS
MONROE CITY OF
2201 WALK UP AVENUE
MONROE, NC 28110
UNITED STATES
Phone :704-282-4603

Prepared by:
Dan Walters
VELOCITY TRUCK CENTERS
6006 MIRAMAR RD.
SAN DIEGO, CA 92121
Phone :619-564-3710

Data Code	Description	Weight Front	Weight Rear
620-013	18,000# TAPERLEAF FRONT SUSPENSION	200	
619-005	MAINTENANCE FREE RUBBER BUSHINGS - FRONT SUSPENSION		
410-001	FRONT SHOCK ABSORBERS		
Rear Axle and Equipment			
420-1K3	MERITOR MT-40-14X 40,000# R-SERIES TANDEM REAR AXLE		-40
421-411	4.11 REAR AXLE RATIO		
424-003	IRON REAR AXLE CARRIER WITH OPTIONAL HEAVY DUTY AXLE HOUSING		40
386-075	MXL 18T MERITOR EXTENDED LUBE MAIN DRIVELINE WITH HALF ROUND YOKES	-10	-10
388-073	MXL 17T MERITOR EXTENDED LUBE INTERAXLE DRIVELINE WITH HALF ROUND YOKES		
452-006	DRIVER CONTROLLED TRACTION DIFFERENTIAL - BOTH TANDEM REAR AXLES		30
878-022	(1) INTERAXLE LOCK VALVE, (1) DRIVER CONTROLLED DIFFERENTIAL LOCK FORWARD-REAR AXLE VALVE AND (1) REAR-REAR AXLE VALVE		
87A-017	INDICATOR LIGHT FOR EACH INTERAXLE LOCKOUT SWITCH, DISENGAGE INTERAXLE LOCK WITH IGNITION OFF		
87B-023	INDICATOR LIGHT AND BUZZER FOR EACH DIFFERENTIAL LOCKOUT SWITCH, ENGAGE AT SPEEDS 5 MPH PR LESS, DISENGAGE W/IGN OFF OR SPEEDS EXCEEDING 25 MPH		
423-019	MERITOR 16.5X8.62 Q+ CAST SPIDER CAM REAR BRAKES, DOUBLE ANCHOR, FABRICATED SHOES		
433-002	NON-ASBESTOS REAR BRAKE LINING		
434-011	BRAKE CAMS AND CHAMBERS ON FORWARD SIDE OF DRIVE AXLE(S)		
451-001	CAST IRON OUTBOARD REAR BRAKE DRUMS		40
440-006	REAR OIL SEALS		
426-101	WABCO TRISTOP D LONGSTROKE 2-DRIVE AXLE SPRING PARKING CHAMBERS		
428-003	HALDEX AUTOMATIC REAR SLACK ADJUSTERS		
41T-002	CURRENT AVAILABLE SYNTHETIC 75W-90 REAR AXLE LUBE		

Data Code	Description	Weight Front	Weight Rear
42T-001	STANDARD REAR AXLE BREATHER(S)		

Rear Suspension

622-297	TUFTRAC GEN2 40,000# REAR SPRING SUSPENSION		275
621-108	9.5 INCH NOMINAL RIDE HEIGHT (460MM GLOBAL REFERENCE HEIGHT)		
431-003	AXLE CLAMPING GROUP		
624-025	55 INCH AXLE SPACING		
623-006	FORE/AFT AND TRANSVERSE CONTROL RODS		
439-001	REAR SHOCK ABSORBERS - ONE AXLE		

Pusher / Tag Equipment

429-998	NO PUSHER/TAG BRAKE DUST SHIELDS		

Brake System

490-121	WABCO 4S/4M ABS WITH TRACTION CONTROL		
871-001	REINFORCED NYLON, FABRIC BRAID AND WIRE BRAID CHASSIS AIR LINES		
904-001	FIBER BRAID PARKING BRAKE HOSE		
412-001	STANDARD BRAKE SYSTEM VALVES		
46D-002	STANDARD AIR SYSTEM PRESSURE PROTECTION SYSTEM		
413-002	STD U.S. FRONT BRAKE VALVE		
432-003	RELAY VALVE WITH 5-8 PSI CRACK PRESSURE, NO REAR PROPORTIONING VALVE		
480-088	WABCO SYSTEM SAVER HP WITH INTEGRAL AIR GOVERNOR AND HEATER		
479-003	AIR DRYER MOUNTED INBOARD ON LH RAIL		
460-001	STEEL AIR BRAKE RESERVOIRS		
477-004	PULL CABLES ON ALL AIR RESERVOIR(S)		

Trailer Connections

476-998	NO AIR HOSE HANGER		

Data Code	Description	Weight Front	Weight Rear
914-001	AIR CONNECTIONS TO END OF FRAME WITH GLAD HANDS FOR TRUCK AND NO DUST COVERS		
919-063	(1) QUICKFIT PROGRAMMABLE SOLENOID W/STATE RETENTION PLUMBED TO BACK OF CAB		
296-010	PRIMARY CONNECTOR/RECEPTACLE WIRED FOR SEPARATE STOP/TURN, ABS CENTER PIN POWERED THROUGH IGNITION		
303-025	SAE J560 7-WAY PRIMARY TRAILER CABLE RECEPTACLE MOUNTED END OF FRAME		
310-998	NO TRAILER ELECTRICAL CABLE		

Wheelbase & Frame

545-507	5075MM (200 INCH) WHEELBASE		
546-101	11/32X3-1/2X10-15/16 INCH STEEL FRAME (8.73MMX277.8MM/0.344X10.94 INCH) 120KSI	230	-30
547-001	1/4 INCH (6.35MM) C-CHANNEL INNER FRAME REINFORCEMENT	180	370
548-803	TEM TO EVALUATE AND INSTALL FRAME RAIL REINFORCEMENT AS NEEDED FOR FRONT FRAME MOUNTED EQUIPMENT		
552-037	1775MM (70 INCH) REAR FRAME OVERHANG		
55W-006	FRAME OVERHANG RANGE: 61 INCH TO 70 INCH		
549-016	24 INCH INTEGRAL FRONT FRAME EXTENSION WITH 0.25 INCH INSERT	325	-50
AC8-99D	CALC'D BACK OF CAB TO REAR SUSP C/L (CA) 134.25 in		
AE8-99D	CALCULATED EFFECTIVE BACK OF CAB TO REAR SUSPENSION C/L (CA) 131.25 in		
AE4-99D	CALC'D FRAME LENGTH - OVERALL 339.31 in		
FSS-0LH	CALCULATED FRAME SPACE LH SIDE 42.89 in		
FSS-0RH	CALCULATED FRAME SPACE RH SIDE 80.25 in		
AM6-99D	CALC'D SPACE AVAILABLE FOR DECKPLATE 0.0 in		
553-001	SQUARE END OF FRAME		
550-001	FRONT CLOSING CROSSMEMBER		
559-001	STANDARD WEIGHT ENGINE CROSSMEMBER		

Prepared For :
MONICA BULOS
MONROE CITY OF
2201 WALK UP AVENUE
MONROE, NC 28110
UNITED STATES
Phone :704-282-4603

Prepared by:
Dan Walters
VELOCITY TRUCK CENTERS
6006 MIRAMAR RD.
SAN DIEGO, CA 92121
Phone :619-564-3710

Data Code	Description	Weight Front	Weight Rear
562-001	STANDARD MIDSHIP #1 CROSSMEMBER(S)		
572-001	STANDARD REARMOST CROSSMEMBER		
565-002	HEAVY DUTY SUSPENSION CROSSMEMBER		30
Chassis Equipment			
556-1E7	14 INCH PAINTED STEEL SEVERE DUTY BUMPER	125	-15
558-001	FRONT TOW HOOKS - FRAME MOUNTED	15	
574-001	BUMPER MOUNTING FOR SINGLE LICENSE PLATE		
585-998	NO MUDFLAP BRACKETS		
590-998	NO REAR MUDFLAPS		
551-007	GRADE 8 THREADED HEX HEADED FRAME FASTENERS		
44Z-002	EXTERIOR HARNESSES WRAPPED IN ABRASION TAPE		
605-017	LEVEL FRAME RAILS (+1%, -0%) WHEN CHASSIS IS LOADED TO FRONT AND REAR SUSPENSION RATINGS		
607-001	CLEAR FRAME RAILS FROM BACK OF CAB TO FRONT REAR SUSPENSION BRACKET, BOTH RAILS OUTBOARD		
Fifth Wheel			
578-998	NO FIFTH WHEEL		
Fuel Tanks			
204-154	80 GALLON/302 LITER ALUMINUM FUEL TANK - LH	10	
218-006	25 INCH DIAMETER FUEL TANK(S)		
215-005	PLAIN ALUMINUM/PAINTED STEEL FUEL/HYDRAULIC TANK(S) WITH PAINTED BANDS		
212-007	FUEL TANK(S) FORWARD		
664-001	PLAIN STEP FINISH		
205-001	FUEL TANK CAP(S)		
122-077	ALLIANCE FUEL FILTER/WATER SEPARATOR WITH HEATED BOWL AND PRIMER PUMP	15	
216-020	EQUIFLO INBOARD FUEL SYSTEM		

Prepared For :
MONICA BULOS
MONROE CITY OF
2201 WALK UP AVENUE
MONROE, NC 28110
UNITED STATES
Phone :704-282-4603

Prepared by:
Dan Walters
VELOCITY TRUCK CENTERS
6006 MIRAMAR RD.
SAN DIEGO, CA 92121
Phone :619-564-3710

Data Code	Description	Weight Front	Weight Rear
202-016	HIGH TEMPERATURE REINFORCED NYLON FUEL LINE		
Tires			
093-1YU	CONTINENTAL HAU 3 WT 315/80R22.5 20 PLY RADIAL FRONT TIRES	100	
094-1RB	CONTINENTAL HDL2 11R22.5 14 PLY RADIAL REAR TIRES		96
Hubs			
418-060	CONMET PRESET PLUS PREMIUM IRON FRONT HUBS		
450-060	CONMET PRESET PLUS PREMIUM IRON REAR HUBS		
Wheels			
502-579	MAXION WHEELS 10041 22.5X9.00 10-HUB PILOT 5.25 INSET 5-HAND STEEL DISC FRONT WHEELS	66	
505-545	MAXION WHEELS 90260 22.5X8.25 10-HUB PILOT 2-HAND HD STEEL DISC REAR WHEELS		160
496-011	FRONT WHEEL MOUNTING NUTS		
497-011	REAR WHEEL MOUNTING NUTS		
Cab Exterior			
829-1A2	114 INCH BBC FLAT ROOF ALUMINUM CONVENTIONAL CAB		
650-008	AIR CAB MOUNTING		
648-002	NONREMOVABLE BUGSCREEN MOUNTED BEHIND GRILLE		
667-037	SHORT FENDER WITH MUDFLAP		
754-017	BOLT-ON MOLDED FLEXIBLE FENDER EXTENSIONS	10	
678-001	LH AND RH GRAB HANDLES		
645-002	BRIGHT FINISH RADIATOR SHELL/HOOD BEZEL		
646-042	STATIONARY BLACK GRILLE WITH BRIGHT ACCENTS		
65X-003	CHROME HOOD MOUNTED AIR INTAKE GRILLE		
644-004	FIBERGLASS HOOD		
652-001	FREIGHTLINER NAME PLATES		

Prepared For :
MONICA BULOS
MONROE CITY OF
2201 WALK UP AVENUE
MONROE, NC 28110
UNITED STATES
Phone :704-282-4603

Prepared by:
Dan Walters
VELOCITY TRUCK CENTERS
6006 MIRAMAR RD.
SAN DIEGO, CA 92121
Phone :619-564-3710

Data Code	Description	Weight Front	Weight Rear
690-002	TUNNEL/FIREWALL LINER		
727-1AH	SINGLE 14 INCH ROUND POLISHED AIR HORN ROOF MOUNTED		
726-001	SINGLE ELECTRIC HORN		
728-001	SINGLE HORN SHIELD		
575-001	REAR LICENSE PLATE MOUNT END OF FRAME		
312-067	HALOGEN COMPOSITE HEADLAMPS WITH BRIGHT BEZELS		
302-047	LED AERODYNAMIC MARKER LIGHTS		
314-824	WIRING AND SWITCH FOR CUSTOMER FURNISHED SNOW PLOW LAMPS WITH DUAL CONNECTIONS AT BUMPER		
311-019	HEADLIGHTS ON WITH WIPERS, WITH DAYTIME RUNNING LIGHTS		
294-1AY	INTEGRAL LED STOP/TAIL/BACKUP LIGHTS		
300-015	STANDARD FRONT TURN SIGNAL LAMPS		
318-1F6	(1) FLUSH LED UTILITY LIGHT MOUNTED LH BACK OF CAB/SLEEPER	3	
744-103	DUAL WEST COAST BRIGHT FINISH HEATED MIRRORS WITH LED LIGHTS AND LH AND RH REMOTE		
797-001	DOOR MOUNTED MIRRORS		
796-001	102 INCH EQUIPMENT WIDTH		
743-204	LH AND RH 8 INCH BRIGHT FINISH CONVEX MIRRORS MOUNTED UNDER PRIMARY MIRRORS		
729-001	STANDARD SIDE/REAR REFLECTORS		
677-054	RH AFTERTREATMENT SYSTEM CAB ACCESS WITH PLAIN DIAMOND PLATE COVER		
275-071	PARK BRAKE REMINDER WARNING SYSTEM WITH ONLY LH DOOR OPEN		
764-010	COMPOSITE EXTERIOR SUN VISOR	10	
768-043	63X14 INCH TINTED REAR WINDOW		
661-004	TINTED DOOR GLASS LH AND RH WITH TINTED OPERATING WING WINDOWS		

Data Code	Description	Weight Front	Weight Rear
654-011	RH AND LH ELECTRIC POWERED WINDOWS		
663-013	1-PIECE SOLAR GREEN GLASS WINDSHELD		
659-019	2 GALLON WINDSHIELD WASHER RESERVOIR WITHOUT FLUID LEVEL INDICATOR, FRAME MOUNTED		
Cab Interior			
055-019	RUGGED TRIM PACKAGE		
707-107	GRAY & CARBON VINYL INTERIOR "RUGGED"		
70K-020	CARBON WITH PREMIUM GUNMETAL ACCENT (RUGGED)		
706-013	MOLDED DOOR PANEL		
708-013	MOLDED PLASTIC DOOR PANEL		
772-006	BLACK MATS WITH SINGLE INSULATION		
785-998	NO DASH MOUNTED ASH TRAYS AND LIGHTER		
691-001	FORWARD ROOF MOUNTED CONSOLE		
693-019	LH AND RH DOOR STORAGE POCKETS INTEGRATED INTO MOLDED DOOR PANELS		
738-021	DIGITAL ALARM CLOCK IN DRIVER DISPLAY		
742-007	(2) CUP HOLDERS LH AND RH DASH		
680-029	M2/SD DASH		
720-003	5 LB. FIRE EXTINGUISHER	10	
700-002	HEATER, DEFROSTER AND AIR CONDITIONER		
701-001	STANDARD HVAC DUCTING		
703-005	MAIN HVAC CONTROLS WITH RECIRCULATION SWITCH		
170-015	STANDARD HEATER PLUMBING		
130-041	VALEO HEAVY DUTY A/C REFRIGERANT COMPRESSOR		
702-002	BINARY CONTROL, R-134A		
739-034	PREMIUM INSULATION		

Prepared For :
MONICA BULOS
MONROE CITY OF
2201 WALK UP AVENUE
MONROE, NC 28110
UNITED STATES
Phone :704-282-4603

Prepared by:
Dan Walters
VELOCITY TRUCK CENTERS
6006 MIRAMAR RD.
SAN DIEGO, CA 92121
Phone :619-564-3710

Data Code	Description	Weight Front	Weight Rear
285-013	SOLID-STATE CIRCUIT PROTECTION AND FUSES		
280-007	12V NEGATIVE GROUND ELECTRICAL SYSTEM		
324-1B3	STANDARD LED CAB LIGHTING		
787-004	REMOTE KEYLESS ENTRY AND 2 TRANSMITTERS	2	
657-001	DOOR LOCKS AND IGNITION SWITCH KEYED THE SAME		
78G-006	KEY QUANTITY OF 6		
655-005	LH AND RH ELECTRIC DOOR LOCKS		
740-998	NO MATTRESS	-20	-15
722-002	TRIANGULAR REFLECTORS WITHOUT FLARES	10	
756-339	PREMIUM ISRINGHAUSEN HIGH BACK AIR SUSPENSION DRIVERS SEAT WITH 2 AIR LUMBAR, INTEGRATED CUSHION EXTENSION, TILT AND ADJUSTABLE SHOCK	70	
760-339	PREMIUM ISRINGHAUSEN HIGH BACK AIR SUSPENSION PASSENGER SEAT WITH 2 AIR LUMBAR, INTEGRATED CUSHION EXTENSION, TILT AND ADJUSTABLE SHOCK	60	20
711-004	LH AND RH INTEGRAL DOOR PANEL ARMRESTS		
758-022	BLACK MORDURA CLOTH DRIVER SEAT COVER		
761-023	BLACK MORDURA CLOTH PASSENGER SEAT COVER		
763-101	BLACK SEAT BELTS		
532-002	ADJUSTABLE TILT AND TELESCOPING STEERING COLUMN		
540-070	4-SPOKE 18 INCH (450MM) LEATHER WRAPPED STEERING WHEEL WITH CHROME SWITCH BEZELS		
765-002	DRIVER AND PASSENGER INTERIOR SUN VISORS		

Instruments & Controls

4CH-001	1 EXTRA PROGRAMMABLE SWITCH/INDICATOR
106-002	ELECTRONIC ACCELERATOR CONTROL
732-998	NO INSTRUMENT PANEL-DRIVER

Prepared For :
MONICA BULOS
MONROE CITY OF
2201 WALK UP AVENUE
MONROE, NC 28110
UNITED STATES
Phone :704-282-4603

Prepared by:
Dan Walters
VELOCITY TRUCK CENTERS
6006 MIRAMAR RD.
SAN DIEGO, CA 92121
Phone :619-564-3710

Data Code	Description	Weight Front	Weight Rear
734-022	FULLY CONFIGURABLE CENTER INSTRUMENT PANELS		
87L-001	ENGINE REMOTE INTERFACE WITH PARK BRAKE INTERLOCK		
870-002	BRIGHT ARGENT FINISH GAUGE BEZELS		
486-001	LOW AIR PRESSURE INDICATOR LIGHT AND AUDIBLE ALARM		
840-001	DUAL NEEDLE PRIMARY AND SECONDARY AIR PRESSURE GAUGE		
198-025	INTAKE MOUNTED AIR RESTRICTION INDICATOR WITHOUT GRADUATIONS		
721-025	97 DB BACKUP ALARM MOUNTED INBOARD OF RAIL		3
149-036	CRUISE CONTROL STEERING WHEEL MOUNTED WITH DISENGAGE WITH WIPERS ON		
156-007	KEY OPERATED IGNITION SWITCH AND INTEGRAL START POSITION; 4 POSITION OFF/RUN/START/ACCESSORY		
811-044	PREMIUM INSTRUMENT CLUSTER WITH 5.0 INCH TFT COLOR DISPLAY		
81B-003	DIGITAL PANEL LAMP DIMMER SWITCH IN DRIVER DISPLAY		
160-038	HEAVY DUTY ONBOARD DIAGNOSTICS INTERFACE CONNECTOR LOCATED BELOW LH DASH		
844-001	2 INCH ELECTRIC FUEL GAUGE		
148-072	ENGINE REMOTE INTERFACE WITH ONE OR MORE SET SPEEDS		
48H-003	QUICKFIT POWERTRAIN INTERFACE CONNECTOR UNDER CAB WITH CAPS		
48C-003	QUICKFIT PROGRAMMABLE INTERFACE CONNECTOR(S) UNDER CAB WITH CAP		
856-001	ELECTRICAL ENGINE COOLANT TEMPERATURE GAUGE		
854-008	DIGITAL ENGINE OIL TEMPERATURE IN DRIVER DISPLAY		
852-002	ELECTRIC ENGINE OIL PRESSURE GAUGE		
864-022	DIGITAL TRANSMISSION OIL TEMPERATURE IN DRIVER DISPLAY		
867-004	ELECTRONIC OUTSIDE TEMPERATURE SENSOR DISPLAY IN DRIVER MESSAGE CENTER		
830-006	ENGINE AND TRIP HOUR METERS INTEGRAL WITHIN DRIVER DISPLAY AND HOBBS PTO OPERATION HOUR	2	

Data Code	Description	Weight Front	Weight Rear
	METER		
372-123	PTO CONTROLS FOR ENHANCED VEHICLE ELECTRIC/ELECTRONIC ARCHITECTURE		
736-998	NO OBSTACLE DETECTION SYSTEM		
72J-998	NO DR ASSIST SYSTEM		
49B-998	NO VEHICLE STABILITY ADVISOR OR CONTROL		
73B-998	NO LANE DEPARTURE WARNING SYSTEM		
679-998	NO OVERHEAD INSTRUMENT PANEL		
35M-010	1 QUICKFIT PROGRAMABLE MODULE (QPM/XMC)	10	
1U1-002	TOP OF DASH RAM MOUNT WITHOUT POWER OR GROUND, FOR CUSTOMER FURNISHED DEVICE		
746-143	7" B-PANEL INTERACTIVE TOUCHSCREEN DISPLAY RADIO W/ USB-C, APPLE CARPLAY, ANDROID AUTO, BLUETOOTH/AM/FM/SXM/WB, WITH MICROPHONE		
747-001	DASH MOUNTED RADIO		
750-002	(2) RADIO SPEAKERS IN CAB		
753-998	NO AM/FM RADIO ANTENNA		
748-006	POWER AND GROUND WIRING PROVISION OVERHEAD		
749-001	ROOF/OVERHEAD CONSOLE CB RADIO PROVISION		
752-004	SINGLE FIBERGLASS LH MIRROR MOUNTED CB ANTENNA WITH BRACKET AND LEAD	2	
75W-002	SHARKFIN MULTI-BAND ANTENNA, RIGHT HAND BIAS ROOF MOUNTING LOCATION: AM/FM/WEATHERBAND, WIFI/BLUETOOTH, SDAR/SIRIUSXM, GNSS/GPS		
78C-003	INTEROPERABLE SDAR ANTENNA		
74D-006	STANDARD RADIO WIRING WITH STEERING WHEEL CONTROLS		
810-027	ELECTRONIC MPH SPEEDOMETER WITH SECONDARY KPH SCALE, WITHOUT ODOMETER		
817-001	STANDARD VEHICLE SPEED SENSOR		
812-001	ELECTRONIC 3000 RPM TACHOMETER		

Data Code	Description	Weight Front	Weight Rear
813-1C8	DETROIT CONNECT PLATFORM HARDWARE		
8D1-215	5 YEARS DETROIT CONNECT BASE PACKAGE(FEATURES VARY BY MODEL) DETROIT CONNECT PLATFORM		
6TS-008	(2) TMC RP1226 ACCESSORY CONNECTORS: (1) LOCATED BEHIND PASSENGER SIDE REMOVABLE DASH PANEL (1) CENTER OF OVERHEAD CONSOLE		
162-002	IGNITION SWITCH CONTROLLED ENGINE STOP		
329-123	TWO EXTRA HARDWIRED SWITCHES IN DASH, ROUTE TO END OF FRAME, CAPPED		
4C1-027	HARDWIRE SWITCH #1, ON/OFF LATCHING, 20 AMPS BATTERY POWER		
4C2-027	HARDWIRE SWITCH #2, ON/OFF LATCHING, 20 AMPS BATTERY POWER		
81Y-005	PRE-TRIP INSPECTION FEATURE FOR EXTERIOR LAMPS ONLY		
264-030	(1) OVERHEAD MOUNTED LANYARD CONTROL FOR DRIVER AIR HORN		
482-001	STANDARD TRACTOR PROTECTION VALVE		
883-001	TRAILER HAND CONTROL BRAKE VALVE		
836-015	DIGITAL VOLTAGE DISPLAY INTEGRAL WITH DRIVER DISPLAY		
660-008	SINGLE ELECTRIC WINDSHIELD WIPER MOTOR WITH DELAY		
304-030	ROTARY HEADLAMP SWITCH, MARKER LIGHTS/HEADLIGHTS SWITCH WITH PULL OUT FOR OPTIONAL FOG/ROAD LAMPS		
882-004	TWO VALVE PARKING BRAKE SYSTEM WITH WARNING INDICATOR		
299-020	SELF CANCELING TURN SIGNAL SWITCH WITH DIMMER, HEADLAMP FLASH, WASH/WIPE/INTERMITTENT		
298-046	INTEGRAL ELECTRONIC TURN SIGNAL FLASHER WITH 40 AMP (20 AMP PER SIDE) TRAILER LAMP CAPACITY		
87T-998	NO WRG/SW-OPTL #2,CHAS,AIR		

Design

065-000	PAINT: ONE SOLID COLOR

Color

980-5F6	CAB COLOR A: L0006EY WHITE ELITE EY

Data Code	Description	Weight Front	Weight Rear
986-020	BLACK, HIGH SOLIDS POLYURETHANE CHASSIS PAINT		
962-972	POWDER WHITE (N0006EA) FRONT WHEELS/RIMS (PKWHT21, TKWHT21, W, TW)		
966-972	POWDER WHITE (N0006EA) REAR WHEELS/RIMS (PKWHT21, TKWHT21, W, TW)		
964-020	STANDARD BLACK BUMPER PAINT		
976-995	SUNVISOR PAINTED SAME AS CAB COLOR A		
963-003	STANDARD E COAT/UNDERCOATING		

Certification / Compliance

996-001	U.S. FMVSS CERTIFICATION, EXCEPT SALES CABS AND GLIDER KITS

Secondary Factory Options

998-001	CORPORATE PDI CENTER IN-SERVICE ONLY
999-062	DLR/CUST ADVSD&ACCPTS BMPR SHOULD BE RMV PRIOR TO RECVR/TOW OF VEH/FRACAS: 11687

TOTAL VEHICLE SUMMARY

Weight Summary

	Weight Front	Weight Rear	Total Weight
Factory Weight+	10084 lbs	6995 lbs	17079 lbs
Total Weight+	10084 lbs	6995 lbs	17079 lbs

Other Factory Charges

PMV-024	GHG24 SURCHARGE - CUMMINS
RD1-215	5 YEARS DETROIT CONNECT BASE PACKAGE(FEATURES VARY BY MODEL) DETROIT CONNECT PLATFORM
RAG-020	CUMMINS TARIFF CHARGE - $205
PAT-025	STEEL, ALUMINUM, AND CHINA TARIFF IMPACT FEE 108/114 SD AND M2 106/112
R26-001	MY26 ESCALATOR
P73-2FT	STANDARD DESTINATION CHARGE

Extended Warranty

WAG-074	TOWING: 1 YEAR/UNLIMITED MILES/KM EXTENDED TOWING COVERAGE $750 CAP FEX APPLIES

(+) Weights Shown are estimates only.
If weight is critical, contact Customer Application Engineering.

(**) Prices shown do not include taxes, fees, etc… "Net Equipment Selling Price" is located on the Quotation Details Proposal Report.

(***) All cost increases for major components (Engines, Transmissions, Axles, Front and Rear Tires) and government mandated requirements, tariffs, and raw material surcharges will be passed through and added to factory invoices.

Prepared For :
MONICA BULOS
MONROE CITY OF
2201 WALK UP AVENUE
MONROE, NC 28110
UNITED STATES
Phone :704-282-4603

Prepared by:
Dan Walters
VELOCITY TRUCK CENTERS
6006 MIRAMAR RD.
SAN DIEGO, CA 92121
Phone :619-564-3710

DIMENSIONS

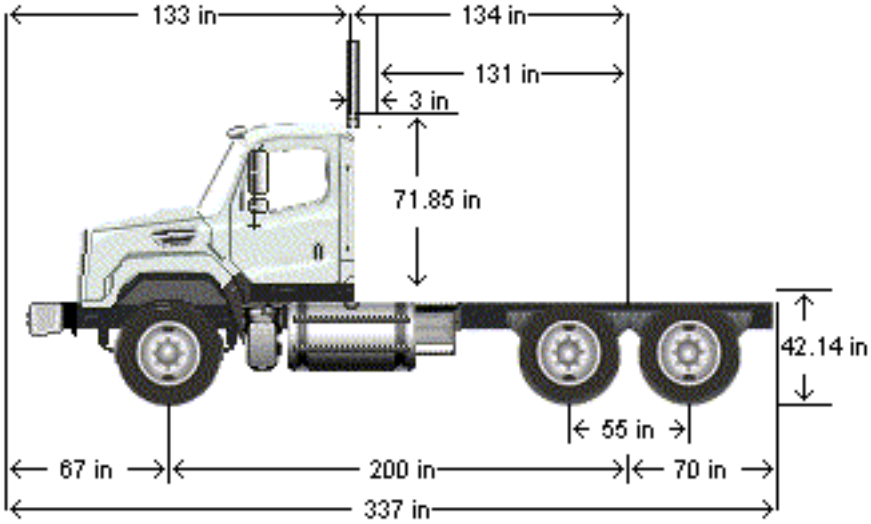

VEHICLE SPECIFICATIONS SUMMARY - DIMENSIONS

Model	114SD
Wheelbase (545)	5075MM (200 INCH) WHEELBASE
Rear Frame Overhang (552)	1775MM (70 INCH) REAR FRAME OVERHANG
Fifth Wheel (578)	NO FIFTH WHEEL
Mounting Location (577)	NO FIFTH WHEEL LOCATION
Maximum Forward Position (in)	0
Maximum Rearward Position (in)	0
Amount of Slide Travel (in)	0
Slide Increment (in)	0
Desired Slide Position (in)	0.0
Cab Size (829)	114 INCH BBC FLAT ROOF ALUMINUM CONVENTIONAL CAB
Sleeper (682)	NO SLEEPER BOX/SLEEPERCAB
Exhaust System (016)	RH OUTBOARD UNDER STEP MOUNTED HORIZONTAL AFTERTREATMENT SYSTEM ASSEMBLY WITH RH B-PILLAR MOUNTED VERTICAL TAILPIPE
Cab to Body Clearance (in)	3.0

Prepared For :
MONICA BULOS
MONROE CITY OF
2201 WALK UP AVENUE
MONROE, NC 28110
UNITED STATES
Phone :704-282-4603

Prepared by:
Dan Walters
VELOCITY TRUCK CENTERS
6006 MIRAMAR RD.
SAN DIEGO, CA 92121
Phone :619-564-3710

TABLE SUMMARY - DIMENSIONS

Dimensions	Inches
Bumper to Back of Cab (BBC)	132.9
Bumper to Centerline of Front Axle (BA)	67.3
Front Axle to Back of Cab (AC)	65.6
Min. Cab to Body Clearance (CB)	3.0
Back of Cab to Centerline of Rear Axle(s) (CA)	134.3
Effective Back of Cab to Centerline of Rear Axle(s) (Effective CA)	131.3
Back of Cab Protrusions (Exhaust/Intake) (CP)	2.0
Back of Cab Protrusions (Side Extenders/Trim Tab) (CP)	0.0
Back of Cab Protrusions (CNG Tank)	0.0
Back of Cab Clearance (CL)	3.0
Back of Cab to End of Frame	204.2
Cab Height (CH)	71.9
Wheelbase (WB)	199.8
Frame Overhang (OH)	69.9
Overall Frame Length	339.3
Overall Length (OAL)	337.0
Rear Axle Spacing	55.0
Unladen Frame Height at Centerline of Rear Axle	42.1

Performance calculations are estimates only. If performance calculations are critical, please contact Customer Application Engineering.

Prepared For :
MONICA BULOS
MONROE CITY OF
2201 WALK UP AVENUE
MONROE, NC 28110
UNITED STATES
Phone :704-282-4603

Prepared by:
Dan Walters
VELOCITY TRUCK CENTERS
6006 MIRAMAR RD.
SAN DIEGO, CA 92121
Phone :619-564-3710

VEHICLE SPECIFICATIONS SUMMARY - GVWR

Model	114SD
Cab Size (829)	114 INCH BBC FLAT ROOF ALUMINUM CONVENTIONAL CAB
Expected Front Axle(s) Load (lbs)	18000.0
Expected Pusher Axle(s) Load (lbs)	0.0
Expected Rear Axle(s) Load (lbs)	40000.0
Expected Tag Axle(s) Load (lbs)	0.0
Expected GVW (lbs)	58000
Expected GCW (lbs)	80000.0
Front Axle (400)	DETROIT DA-F-18.0-5 18,000# FL1 71.0 KPI/3.74 DROP SINGLE FRONT AXLE
Front Suspension (620)	18,000# TAPERLEAF FRONT SUSPENSION
Front Hubs (418)	CONMET PRESET PLUS PREMIUM IRON FRONT HUBS
Front Disc Wheels (502)	MAXION WHEELS 10041 22.5X9.00 10-HUB PILOT 5.25 INSET 5-HAND STEEL DISC FRONT WHEELS
Front Tires (093)	CONTINENTAL HAU 3 WT 315/80R22.5 20 PLY RADIAL FRONT TIRES
Front Brakes (402)	MERITOR EX-L AIR DISC FRONT BRAKES
Steering Gear (536)	TRW THP-60 POWER STEERING WITH RCH45 AUXILIARY GEAR
Rear Axle (420)	MERITOR MT-40-14X 40,000# R-SERIES TANDEM REAR AXLE
Rear Suspension (622)	TUFTRAC GEN2 40,000# REAR SPRING SUSPENSION
Rear Hubs (450)	CONMET PRESET PLUS PREMIUM IRON REAR HUBS
Rear Disc Wheels (505)	MAXION WHEELS 90260 22.5X8.25 10-HUB PILOT 2-HAND HD STEEL DISC REAR WHEELS
Rear Tires (094)	BRIDGESTONE M726ELA 295/75R22.5 14 PLY RADIAL REAR TIRES
Rear Brakes (423)	MERITOR 16.5X8.62 Q+ CAST SPIDER CAM REAR BRAKES, DOUBLE ANCHOR, FABRICATED SHOES
Pusher / Tag Axle (443)	NO PUSHER OR TAG AXLE
Pusher / Tag Suspension (626)	NO PUSHER OR TAG SUSPENSION
Pusher / Tag Hubs (449)	NO PUSHER OR TAG HUBS
Dead/Pusher/Tag Disc Wheels (509)	NO PUSHER/TAG DISC WHEELS
Pusher / Tag Tires (095)	NO PUSHER/TAG TIRES
Pusher / Tag Brakes (456)	NO PUSHER/TAG BRAKES

Prepared For :
MONICA BULOS
MONROE CITY OF
2201 WALK UP AVENUE
MONROE, NC 28110
UNITED STATES
Phone :704-282-4603

Prepared by:
Dan Walters
VELOCITY TRUCK CENTERS
6006 MIRAMAR RD.
SAN DIEGO, CA 92121
Phone :619-564-3710

TABLE SUMMARY - GVWR

	Front	Rear 1	Rear 2
Axle Component Weight Ratings			
Axles	18000	20000	20000
Suspension	18000	20000	20000
Hubs	23000	26000	26000
Brakes	23000	20000	20000
Wheels	20000	31200	31200
Tires	20000	22700	22700
Power Steering	22000	N/A	N/A
GAWR (per axle)	18000	20000	20000
GAWR (per axle system)	18000		40000
Expected Load (per axle system)	18000		40000
GVWR due to Frame	90000		
GVWR due to Transmission	300000		
Vehicle GVWR Summary			
Calculated GVWR	58000		
Expected GVWR	58000		
All weights displayed in pounds			

Performance calculations are estimates only. If performance calculations are critical, please contact Customer Application Engineering.

City of Monroe Streets

210 Heath Nash Street, Monroe, NC 28112
monroenc.org • 704-282-4553 • PO Box 69, Monroe, NC 28111

May 29, 2026

Mr. Ben Rodriguez
HD Contract Manager
National Auto Fleet Group
490 Auto Center Dr, Watsonville, CA 95076

RE: Notice of Intent to Purchase
2027 Freightliner 114SD, Cummins X12 455V Engine, Allison 4500 RDS Transmission with 16' Dump Body via Lee Transport

Dear Mr. Rodriguez:

This letter is being issued to advise you that the City of Monroe intends to purchase a 2027 Freightliner 114SD, Cummins X12 455V Engine, Allison 4500 RDS Transmission with 16' Dump Body via Lee Transport from National Auto Fleet Group per Sourcewell Contract 032824-NAF.

The budget for Fiscal Year 2027 was approved by City Council on May 26, 2026 with the purchase of a dump truck included. The purchase order will be processed in the upcoming Fiscal Year (July, 2026).

Upon delivery Purchasing will sign all necessary documents. Payment will be issued after the vehicle is received. Paperwork for titling at the local DMV will be expected once funding has cleared. Certificate of Origin can be signed over to the below:

City of Monroe
PO Box 69
Monroe NC 28111

Thank you for your assistance on this matter.

Johnny Faulk
Street Division Superintendent
City of Monroe
jfaulk@monroenc.org